AM/FM STEREO RECEIVER

SX-1280

SERVICE MANUAL

PIONEER

MODEL SX-1280 COMES IN FOUR VERSIONS DISTINGUISHED AS FOLLOWS:

Type	Voltage	Remarks
KU	120V only	U.S.A. model
KC	120V only	Canada model
S	110V, 120V, 220V and 240V (Switchable)	General export model
S/G	110V, 120V, 220V and 240V (Switchable)	U.S. Military model

NOTICE:
- This service manual is applicable to the KU and KC types
- As to the S and S/G types, please refer to page 81.

CONTENTS

1. SPECIFICATIONS 3
2. CONNECTION DIAGRAM 5
3. FRONT PANEL FACILITIES 7
4. LEVEL DIAGRAM 10
5. BLOCK DIAGRAM 11
6. CIRCUIT DESCRIPTIONS
   - 6.1 Tuner Section 13
   - 6.2 AF Section 14
   - 6.3 Power Supply Circuit 16
   - 6.4 Protection Circuit 17
7. DISASSEMBLY 18
8. PARTS LOCATION
   - 8.1 Front Panel View 20
   - 8.2 Front View with Panel Removed 21
   - 8.3 Top View 22
   - 8.4 Bottom View 23
   - 8.5 Rear Panel View 24
9. DIAL CORD STRINGING 25

10. ADJUSTMENTS
10.1 FM Tuner 27
10.2 AM Tuner 29
10.3 Power Amplifier 30
10.4 Meter Amplifier 30
11. EXPLODED VIEWS
11.1 External Part 31
11.2 Internal Part 33
12. PACKING 40
13. SCHEMATIC DIAGRAMS, P.C. BOARD PATTERNS AND PARTS LIST
13.1 Schematic Diagram and Miscellaneous Parts 41
13.2 Tuner Assembly (AWE-092) 45
13.3 Microphone Jack Assembly (GWM-105) 52
13.4 Cartridge Load Assembly (GWS-134) 53
13.5 Function Switch Assembly (GWS-133) 54
13.6 EQ Amplifier Assembly (AWF-031) 56
13.7 Flat Amplifier Assembly (AWG-060) 58
13.8 Tone Amplifier Assembly (AWG-059) 61
13.9 Filter Amplifier Assembly (AWM-119) 64
13.10 Power Amplifier Assembly (AWH-074) 67
13.11 Resistor Assembly (AWX-127) 70
13.12 Meter Amplifier Assembly (AWM-121) 72
13.13 Power Supply Assembly (AWR-157) 74
13.14 *Fuse Assembly (AWX-126) or (AWX-139) 77
13.15 Protection Circuit Assembly (AWM-123) 78
ADDITIONAL SERVICE MANUAL
1. SPECIFICATIONS 82
2. CONTRAST OF MISCELLANEOUS PARTS 82
3. EXPLODED VIEW 84
4. SCHEMATIC DIAGRAMS, P.C. BOARD PATTERNS AND PARTS LIST
4.1 Schematic Diagram 85
4.2 5P Connector Assembly (AWX-062) 87
4.3 Fuse Assembly (AWX-134) 88

*NOTE: * Fuse assembly (AWX-126) is applicable to the KU type, and AWX-139 is for the KC type.*

1. SPECIFICATIONS

Semiconductors

FETs 5
ICs 6
Transistors 67
Diodes 50

Power Amplifier Section

Continuous power output of 185 watts* per channel, min., at 8 ohms from 20 Hertz to 20,000 Hertz with no more than 0.03% total harmonic distortion.

Total Harmonic Distortion (20 Hertz to 20,000 Hertz)
- Continuous Rated Power Output . .No more than 0.03%
- 90 watts per channel power output, 8 ohms . . . . . No more than 0.01%
- 1 watt per channel power output, 8 ohms . . . . . No more than 0.01%

Intermodulation Distortion (50 Hertz: 7,000 Hertz = 4:1)
- Continuous Rated Power Output . .No more than 0.01%
- 90 watts per channel power output, 8 ohms . . . . . No more than 0.006%
- 1 watt per channel power output, 8 ohms . . . . . No more than 0.005%

Frequency Response . . . . . 5 Hertz to 10,000 Hertz $^{+0}_{-1}$ dB
Input Sensitivity/Impedance
- POWER AMP IN . . . . . 1V/50 kilohms

Output
- SPEAKERS . . . . . A, B, C, A+B, B+C, C+A

Damping Factor
- (20 Hertz to 20,000 Hertz, 8 ohms) 30

Hum and Noise (IHF, short-circuited, A Network) . . 105dB

Preamplifier Section

Input (Sensitivity/Impedance)
- PHONO 1 . . . . . 2.5mV/50 kilohms
- Cartridge load (capacitance) . . . 100, 200, 300, 400pF
- PHONO 2 . . . . . 2.5mV/50 kilohms
- MIC . . . . . 7.5mV/50 kilohms
- AUX . . . . . 150mV/50 kilohms
- TAPE PLAY 1 . . . . . 150mV/50 kilohms
- TAPE PLAY 2 . . . . . 150mV/50 kilohms

PHONO Overload Level (1kHz; T.H.D: 0.03%)
- PHONO 1, 2 . . . . . 300mV

Output Level/Impedance
- TAPE REC 1 . . . . . 150mV
- TAPE REC 2 . . . . . 150mV
- PRE OUT . . . . . 1V/1 kilohms

Total Harmonic Distortion
- (20Hz to 20,000Hz, 1V output) . . .No more than 0.01%

Frequency Response
- PHONO (RIAA equalization) . 20Hz to 20,000Hz ±0.2dB
- AUX, TAPE PLAY . . . . . 5Hz to 80,000Hz $^{+0}_{-1}$ dB

Tone Control
- BASS . . . . . ±10dB (100Hz) main control, ±5dB (50Hz) sub control
- TREBLE . . . . . ±10dB (10kHz) main control, ±5dB (20kHz) sub control

Filter
- LOW 15Hz (12dB/oct.)
- HIGH 8kHz (12dB/oct.)

Loudness Contour (Volume control set at −40dB position) . . . . +6dB (100Hz), +3dB (10kHz)
Hum and Noise
- (IHF, short-circuited, A Network)
- PHONO 80dB
- AUX, TAPE PLAY 95dB

Muting . . . . . −20dB

FM Tuner Section

Usable Sensitivity
- MONO 9.8dBf (1.7μV)

50dB Quieting Sensitivity
- MONO 14.2dBf (2.8μV)
- STEREO 36dBf (34μV)

Signal-to-Noise Ratio
- (at 75dBf) . . .STEREO 74dB
- (at 65dBf) . . .MONO 80dB
- STEREO 71dB

Distortion (at 65dBf)
- 100Hz MONO/STEREO 0.1%/0.2%
- 1kHz MONO/STEREO 0.1%/0.15%
- 6kHz MONO/STEREO 0.1%/0.2%

Frequency Response . . . . . 30Hz to 15,000Hz $^{+0.2}_{-0.5}$ dB
Capture Ratio 1.0dB
Alternate Channel Selectivity 80dB
Spurious Response Ratio 100dB
Image Response Ratio 90dB
IF Response Ratio 110dB
AM Suppression Ratio 55dB
Muting Threshold 19.2dBf (5μV)
Stereo Separation . . . 50dB (1kHz), 35dB (30Hz – 15kHz)
Subcarrier Product Ratio 65dB
SCA Rejection Ratio 65dB
Antenna Input . . . . . 300 ohms balanced, 75 ohms unbalanced

AM Tuner Section

Sensitivity (IHF, Ferrite antenna) 300μV/m
(IHF, Ext. antenna) 15μV
Selectivity 30dB
Signal-to-Noise Ratio 50dB
Image Response Ratio 40dB
IF Response Ratio 40dB
Antenna . . . . . Built-in Ferrite Loopstick Antenna

Miscellaneous

Power Requirements 120V 60Hz
Power Consumption . . . . . 430W (UL), 1000VA (CSA)
1100W (max.)
Dimensions . . . . . 556(W) x 186(H) x 461(D) mm
21-11/16(W) x 6-15/16(H) x 17-5/16(D) in
Weight Without Package 28.7kg (63lb 3oz)
With Package 32.1kg (70lb 10oz)

Furnished Parts

FM T-type Antenna 1
Operating Instructions 1
Hex. Wrench 1

**Measured pursuant to the Federal Trade Commission's Trade Regulation rule on Power Output Claims for Amplifiers.*

NOTE:
Specifications and the design subject to possible modification without notice due to improvements.

HEX. WRENCH

The accessory hexagonal wrench is provided for removing the TUNING knob and VOLUME knob or tightening their set screws should they become loose.
If required, loosen the set screw by inserting the wrench into the hole on the side of the knob and turning the wrench counter-clockwise. Be particularly careful not to scratch the front panel when employing the wrench.

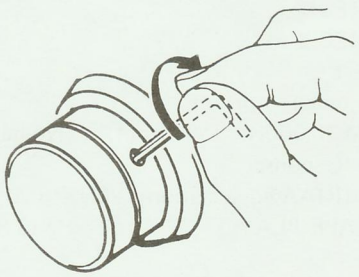

2. CONNECTION DIAGRAM

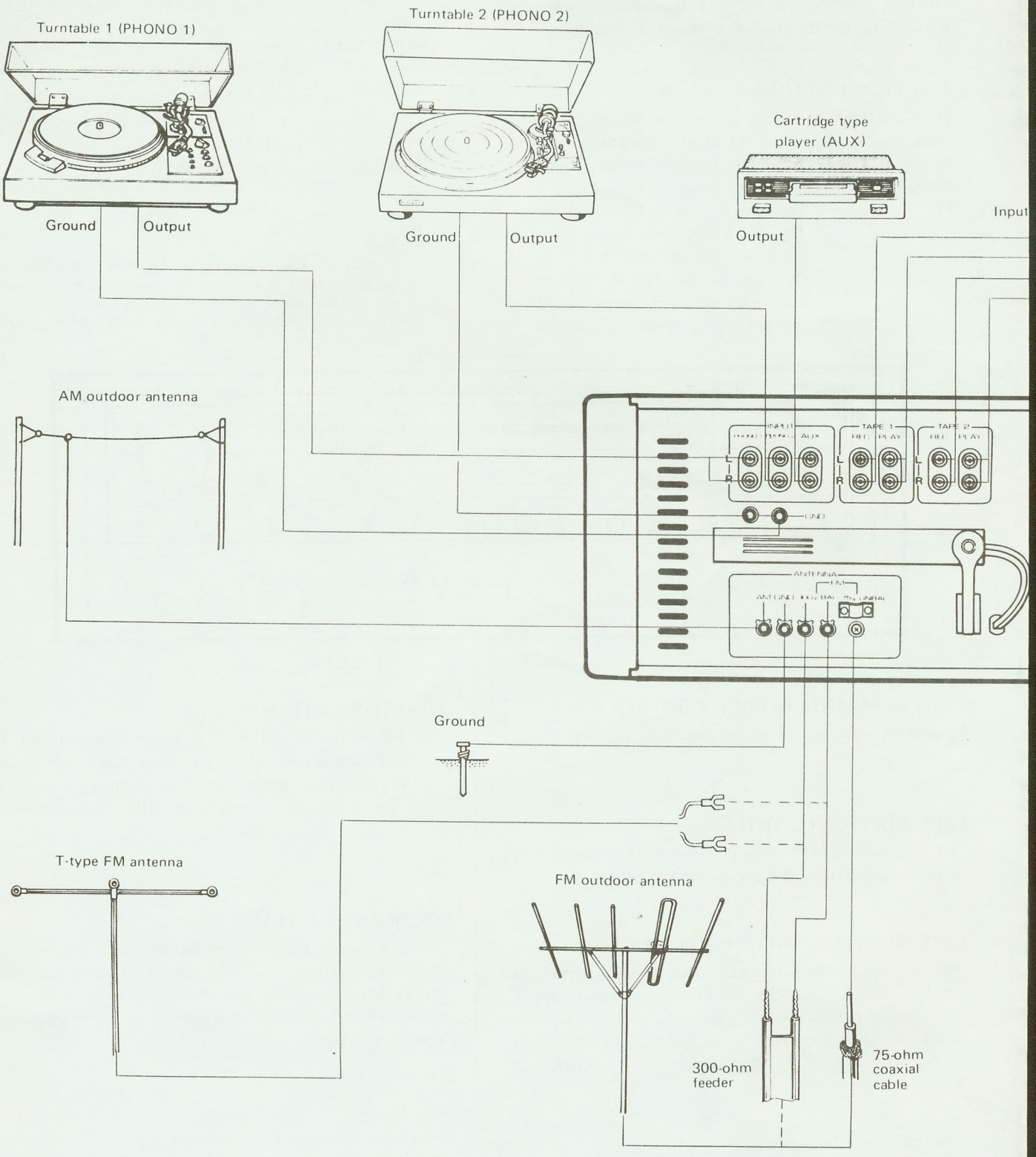

Connect the power plug to the wall outlet because this receiver requires a lot of power.

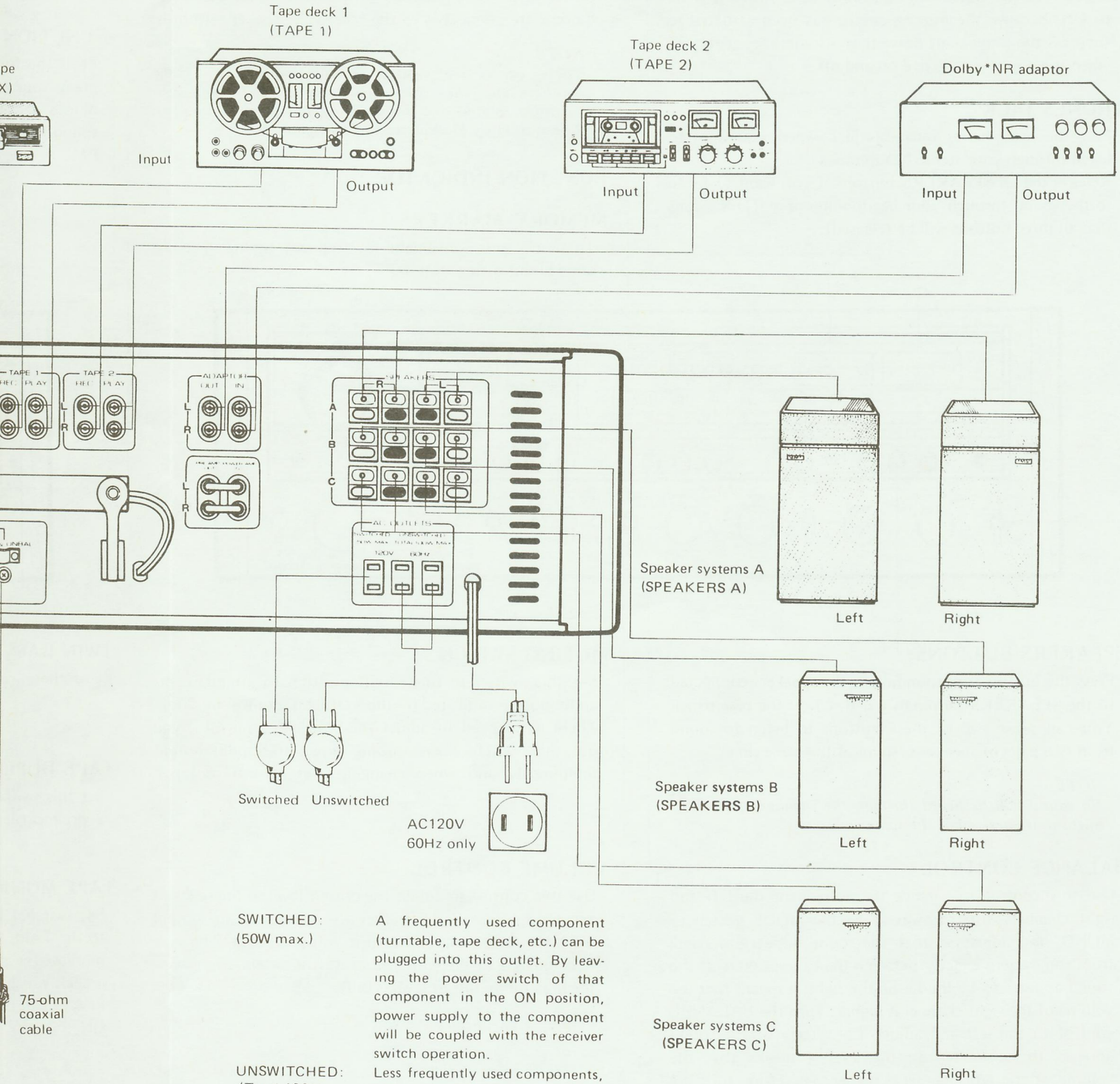

SWITCHED: (50W max.) A frequently used component (turntable, tape deck, etc.) can be plugged into this outlet. By leaving the power switch of that component in the ON position, power supply to the component will be coupled with the receiver switch operation.

UNSWITCHED: (Total 100W max.) Less frequently used components, which do not require coupled power, can be plugged into either of these outlets.

* The word "Dolby" is a trademark of Dolby Laboratories Inc.

3. FRONT PANEL FACILITIES

POWER SWITCH

Flip this switch to the ON position to supply power to the stereo receiver. There will be a short delay when it is set to ON, because the muting circuit has been actuated to suppress the unpleasant noise that is sometimes generated when the power is switched on and off.

PHONES JACK

Plug the headphones into this jack when you want to listen through your stereo headphones.
Release the all SPEAKERS buttons if you want to listen to the sound through your headphones only (This means that all three buttons will be released).

POWER METERS

These power meters allow you to read out the rated power level when speakers with a nominal impedance of 8 ohms are connected to the receiver's speaker terminals.

NOTE:
These values are related to the impedance of the speakers and they vary according to the frequency. In order to find out the exact output level, connect an 8-ohm dummy load instead of the speakers.

FUNCTION INDICATOR

MEMORY MARKERS

These are very convenient for frequent tuning in to the same broadcasting station.

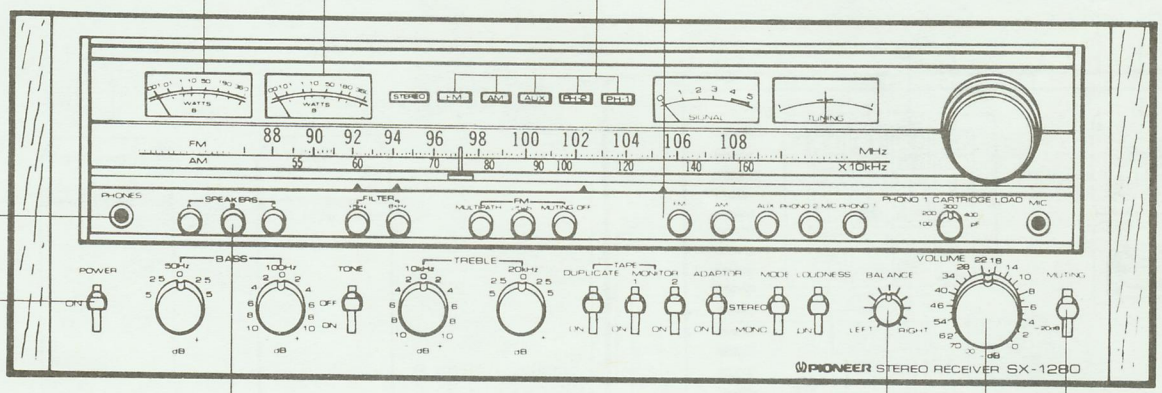

SPEAKERS BUTTONS

Press the button corresponding to the speakers connected to the SPEAKERS terminals (A, B, C) on the rear panel. You can press two of these buttons to listen to sound from two pairs of speaker systems at the same time.

NOTE:
No sound will be heard through the speakers if all three buttons are pressed at the same time.

BALANCE CONTROL

Use this control to balance the volume of the left and right channels. First, however, set the MODE switch to MONO, and adjust so that the sound appears to come from somewhere exactly between the two speakers. If the sound appears to be louder on the right, it means that the volume of the right channel is higher. Turn the BALANCE control to the left and adjust. Conversely, if the sound appears to be louder on the left, it means that the volume of the left channel is higher. Therefore, turn the BALANCE control to the right and adjust. After adjusting, return the MODE switch to STEREO.

MUTING SWITCH

Set this switch to the −20dB position to attenuate the audio output indicated by the VOLUME control by 20dB. There is no need to adjust the VOLUME control if you use this switch when turning down the audio output temporarily and when changing over records or tapes.

VOLUME CONTROL

Use this control to adjust the output level to the speakers and headphones. Turn it clockwise to increase the output level. No sound will be heard if you set it to ∞. The scale is graduated in dB which indicate the attenuation when the maximum output level is 0dB.

TONE SWIT

Set this swi
TREBLE co
amplifier to o

FUNCTION

Press the fun
gram source.
before select
sound from o
FM . . . . . .

TWIN BASS

Use these co

TAPE DUPLI

Set this switch
a pre-recorded

TAPE MONIT

Set switch 1 t
to the TAPE 1
monitor the pl
a deck which i
PLAY) can be
ON.

NOTE:
Set these sw
listening to re

TONE SWITCH

Set this switch to ON when adjusting the BASS and TREBLE controls. In the OFF position, it causes the amplifier to operate with a flat frequency response.

FUNCTION BUTTONS

Press the function button which corresponds to the program source. Turn the VOLUME control down first before selecting a different function button while the sound from one program source is being reproduced.

FM . . . . . Press this button for FM broadcasts. The FM STEREO indicator lights up when the receiver is tuned in to an FM stereo broadcast. The sound is automatically received monophonically during FM monophonic broadcasts.

AM . . . . . Press this button for AM broadcasts.

AUX . . . . . Press this button when listening to an audio component connected to the AUX input jacks.

PHONO 2/MIC . . Press this button when playing a record on the turntable connected to the PHONO 2 jacks, or when using a microphone which you have plugged into the MIC jack.

PHONO 1 . . . . . Press this button when playing a record on the turntable connected to the PHONO 1 jacks.

NOTES:

1. *Unplug the microphone from the MIC jack when you do not intend to use the microphone otherwise you will not be able to use the PHONO 2 jacks.*
2. *Only one function button should be pressed at a time.*

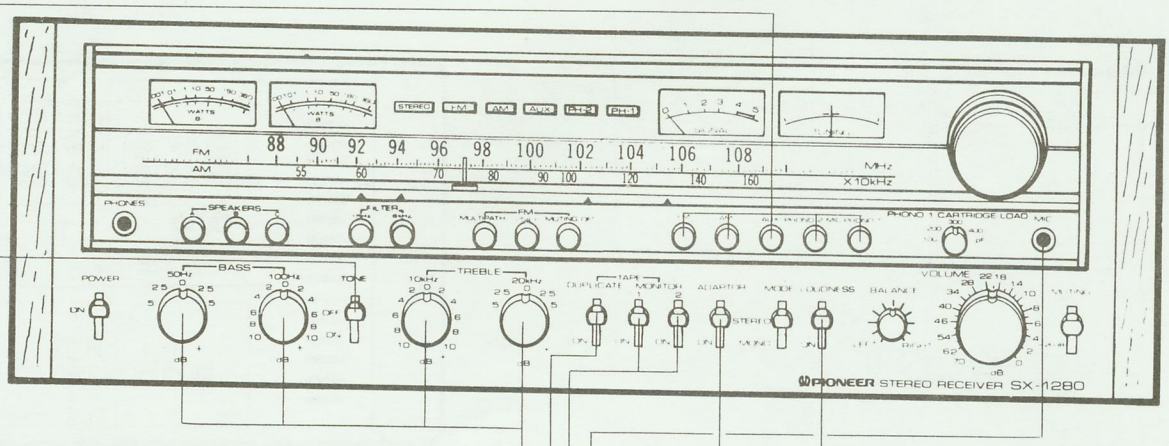

TWIN BASS AND TREBLE CONTROLS

Use these controls to adjust the bass and the treble.

TAPE DUPLICATE SWITCH

Set this switch to ON when you want to duplicate or edit a pre-recorded tape using two tape decks.

TAPE MONITOR SWITCHES (1, 2)

Set switch 1 to ON with a tape deck which is connected to the TAPE 1 jacks (REC and PLAY) when you want to monitor the playback or recording of a tape. The tape on a deck which is connected to the TAPE 2 jacks (REC and PLAY) can be similarly monitored by setting switch 2 to ON.

NOTE:
Set these switches to the upper (off) position when listening to records or a broadcast.

ADAPTOR SWITCH

Set this switch to ON when reproducing sound from an optional component which has been connected to the ADAPTOR jacks. Always set it to its upper position if you are not using a component with these terminals.

LOUDNESS SWITCH

Set this switch to ON when listening at a low volume. The frequency response of the human ear varies according to the listening volume, and setting this switch to the ON position compensates for hearing response by emphasizing the bass and treble.

MIC JACK

Plug your microphone into this jack.
The microphone signals are reproduced in mono through the left and right speakers.

TUNING METER

When tuning in to an FM station, the optimum reception position is indicated when the meter pointer deflects to dead center. Check that the SIGNAL meter pointer has deflected as far to the right as possible.

SIGNAL METER

When tuning in to an AM or FM station, the optimum reception position is indicated by the maximum deflection of the meter pointer to the right.

FM MULTIPATH BUTTON

Use this switch to detect multipath sound when installing the FM antenna in a position which yields the minimum multipath interference.

STEREO INDICATOR

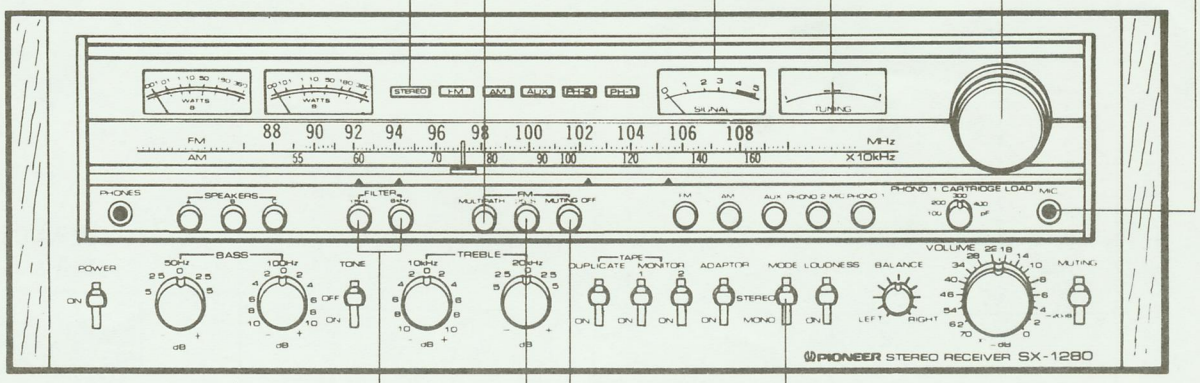

PHONO 1 CARTRIDGE LOAD SWITCH

Use this knob to select the input capacitance (pF) in accordance with the specified load capacitance of the moving magnet (MM) cartridge connected to the PHONO 1 jacks.

TUNING KNOB

Use this to tune in to broadcasting stations.
Select the station and tune for optimum reception by observing the SIGNAL meter for AM stations and both the SIGNAL and TUNING meters for FM stations.

FILTER BUTTONS

15Hz . . When this button is pressed, a 12dB/oct attenuation can be provided for frequencies below 15Hz. This means that you can cancel out noise in the ultra-low frequencies which is generated by low-pitched rumble from a turntable and other forms of distortion. Although this noise cannot be heard, it can generate intermodulation distortion.

8kHz . . Press this button to provide a 12dB/oct attenuation at frequencies above 8kHz. Set it to this position when you find high-frequency noise, such as that from scratched records, unpleasant.

FM 25μs BUTTON

Press this button when listening to a *Dolby FM broadcast; otherwise keep this button at the released position.

MODE SWITCH

Use this switch for selecting mono or stereo performances.

STEREO: Set to this position for normal stereo operation.

MONO: When set to this position, the left and right channel signals will be mixed and reproduced monophonically from both speaker systems.

FM MUTING BUTTON

ON (released position) . . . Release this button to suppress unpleasant inter-station noise when tuning in to FM stations.

OFF (depressed position) . Depress this button to pick up weak stations.

4. LEVEL DIAGRAM

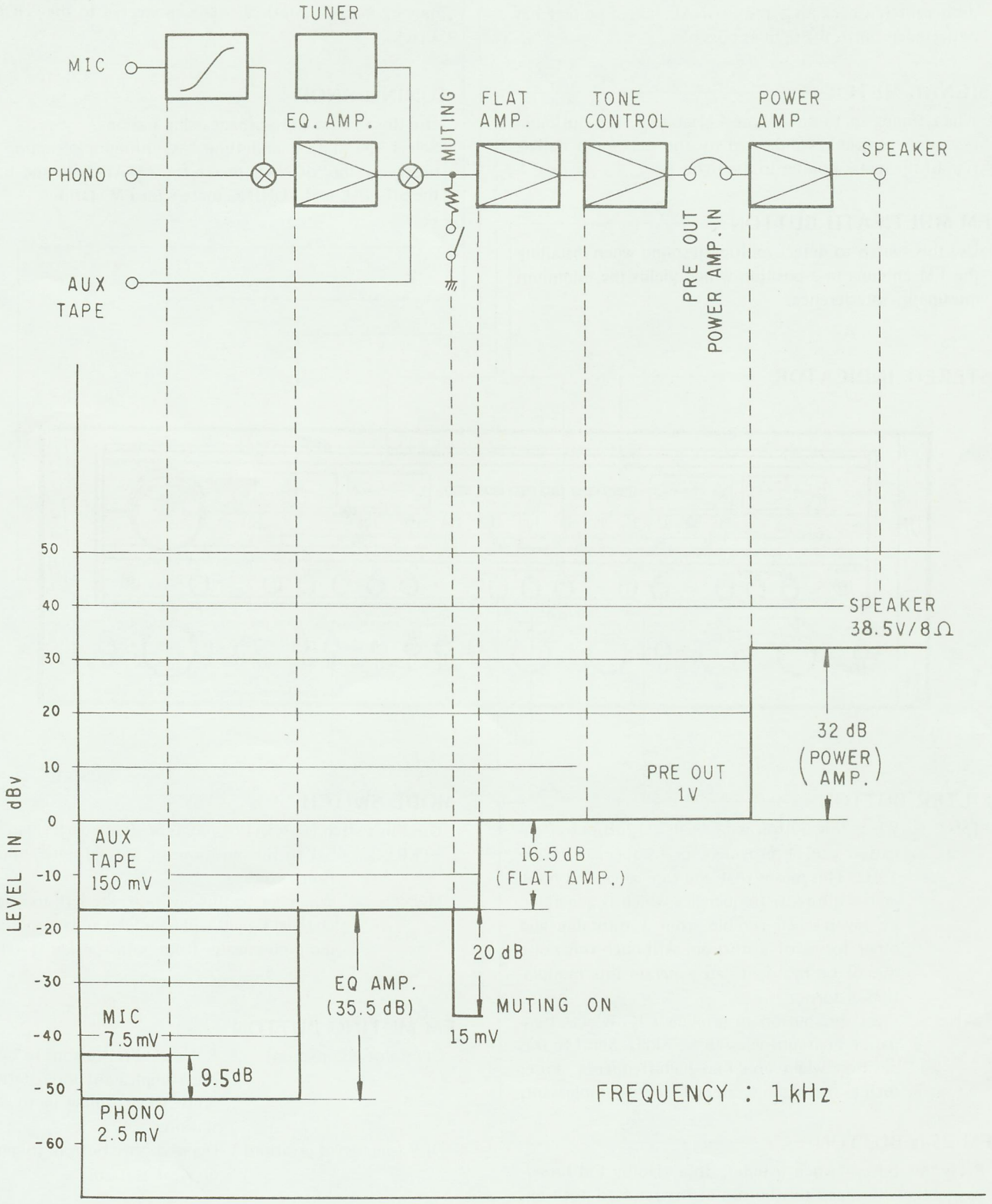

5. BLOCK DIAGRAM

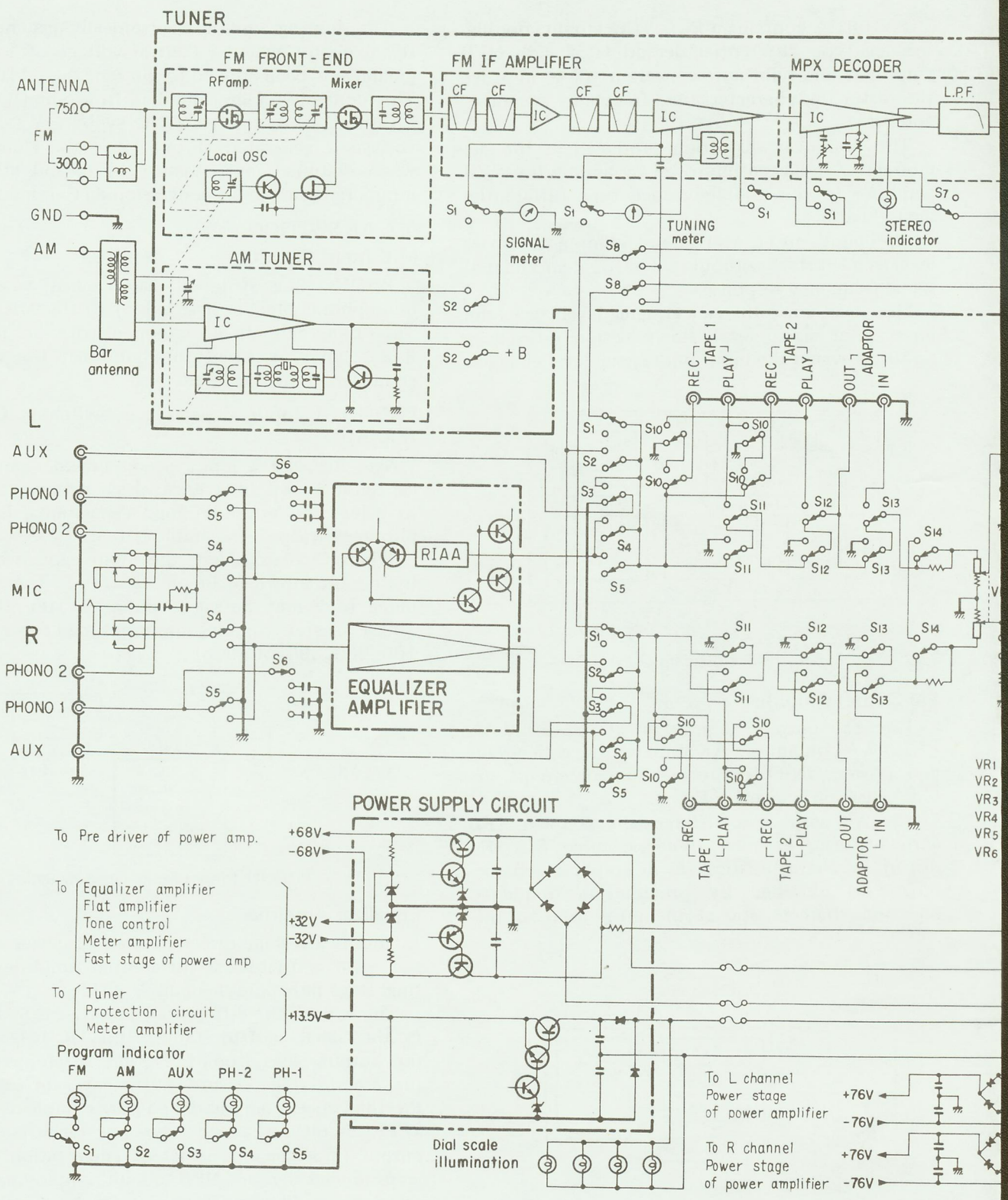

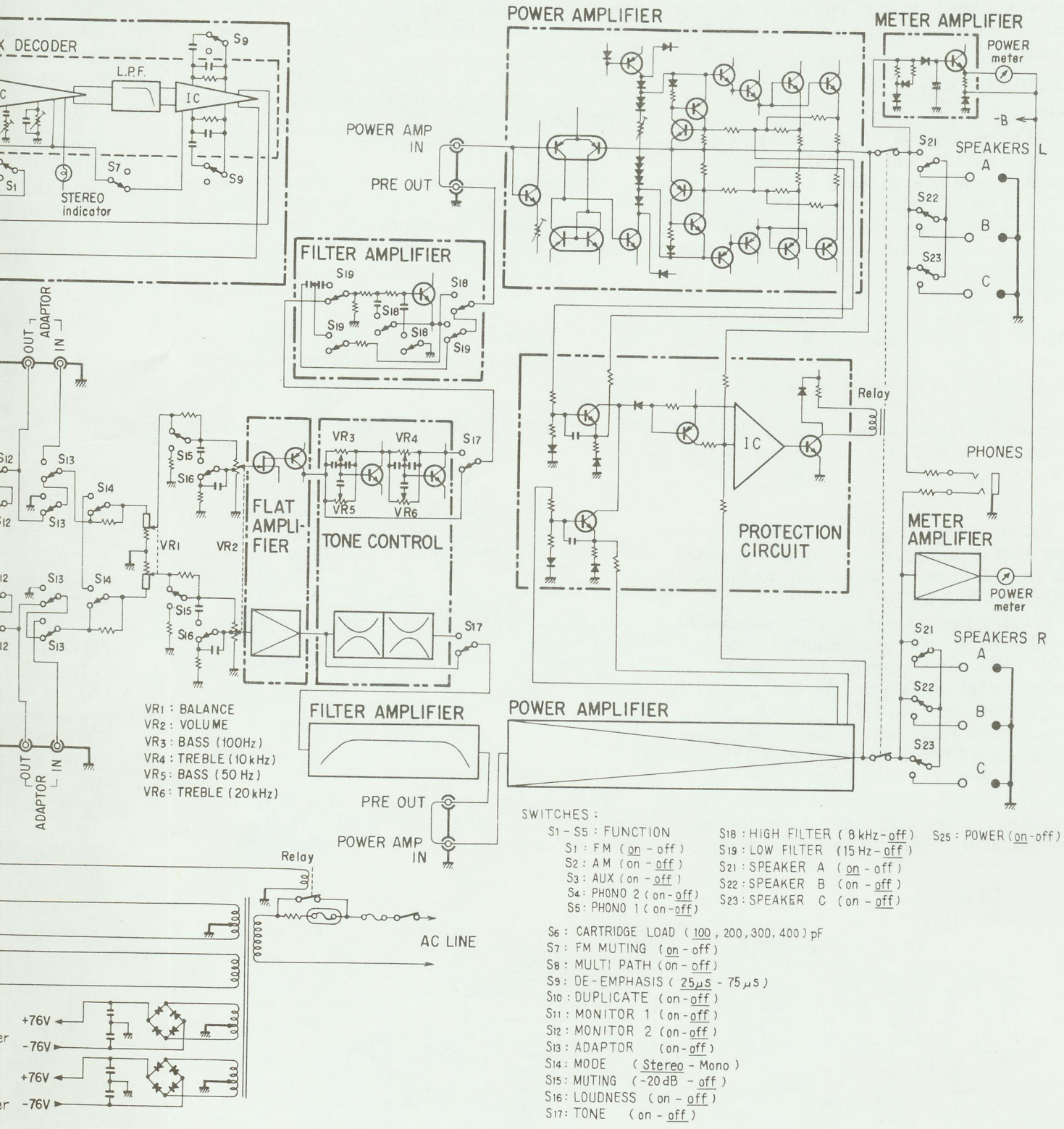

SWITCHES :

S1 - S5 : FUNCTION
- S1 : FM (on - off)
- S2 : AM (on - off)
- S3 : AUX (on - off)
- S4 : PHONO 2 (on - off)
- S5 : PHONO 1 (on - off)

S18 : HIGH FILTER (8 kHz - off)
S19 : LOW FILTER (15 Hz - off)
S21 : SPEAKER A (on - off)
S22 : SPEAKER B (on - off)
S23 : SPEAKER C (on - off)
S25 : POWER (on - off)

S6 : CARTRIDGE LOAD (100 , 200, 300, 400) pF
S7 : FM MUTING (on - off)
S8 : MULTI PATH (on - off)
S9 : DE-EMPHASIS (25 μS - 75 μS)
S10 : DUPLICATE (on - off)
S11 : MONITOR 1 (on - off)
S12 : MONITOR 2 (on - off)
S13 : ADAPTOR (on - off)
S14 : MODE (Stereo - Mono)
S15 : MUTING (-20 dB - off)
S16 : LOUDNESS (on - off)
S17 : TONE (on - off)

6. CIRCUIT DESCRIPTIONS

Refer to the block diagram on page 11 and the schematic on page 43 for the circuit composition of this unit.

6.1 TUNER SECTION

AM Tuner

The AM tuner employs a 2-gang variable capacitor, one IC (HA1197) and one AM ceramic filter. Its block diagram is given in Fig. 1.

HA1197 is an IC containing an RF amplifier, converter, 2-stage IF amplifier, detector, and AGC circuit, and features excellent AF frequency response and distortion. Q_1 of the output circuit is a special AM muting circuit. This circuit is operated until the AM tuner stabilizes immediately after the FUNCTION AM switch has been set to ON. The instant the AM switch is set to ON, +B is supplied to R_8, thru C_9, and the base of Q_1 is forward biased.

Consequently, Q_1 is turned ON, and the AM output signal is shorted to ground during the time constant of C_9, R_8.

FM Front End

The FM front end employs a 4-gang variable capacitor in the tuning circuit, dual gate MOS FETs at the RF amplifier and mixer, and a local oscillator with J-FET buffer.

The FM front-end input is 75Ω unbalanced single-tuned circuit. The RF amplifier is a dual gate MOS FET. An M-coupled double-tuned circuit is inserted between stages. The dual gate FET is an amplifying element suitable for RF circuits, and features extremely stable amplification because of its low NF (Noise Figure), high PG (Power Gain) and low feedback capacitance.

The mixer is also a dual gate MOS FET. The reception signal is applied to gate 1 and the local oscillator signal is applied to gate 2. This circuit has low local oscillator signal injection power and the strong reception signal has little effect on the local oscillator.

The local oscillator is a modified Clapp circuit. Its output signal is injected into the mixer thru a J-FET buffer.

IF Amplifier

Four dual element ceramic filters are used as the selection elements, and one IC (TA7302P) containing two differential amplifiers and one FM IF IC (PA3001-A) are used as the amplification elements.

The TA7302P compensates for the filter insertion loss, and also limits the amplitude of the FM signal.

The PA3001-A performs IF amplification, amplitude limiting and FM detection. It also drives the TUNING and SIGNAL meters and controls muting.

The block diagram of the PA3001-A is given in Fig. 2.

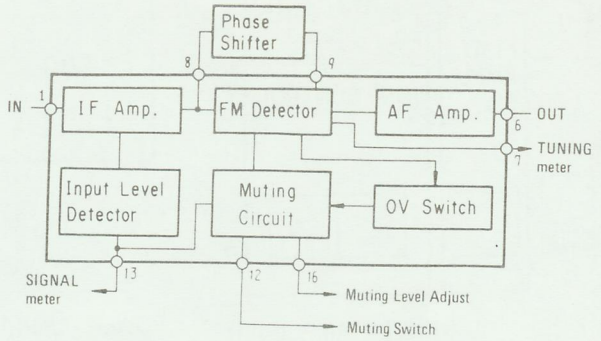

Fig. 2 Block diagram of PA3001-A

FM Multiplex Decoder

The FM multiplex decoder is a PLL (Phase-Locked-Loop) MPX IC (PA1001-A). Its block diagram is given in Fig. 3.

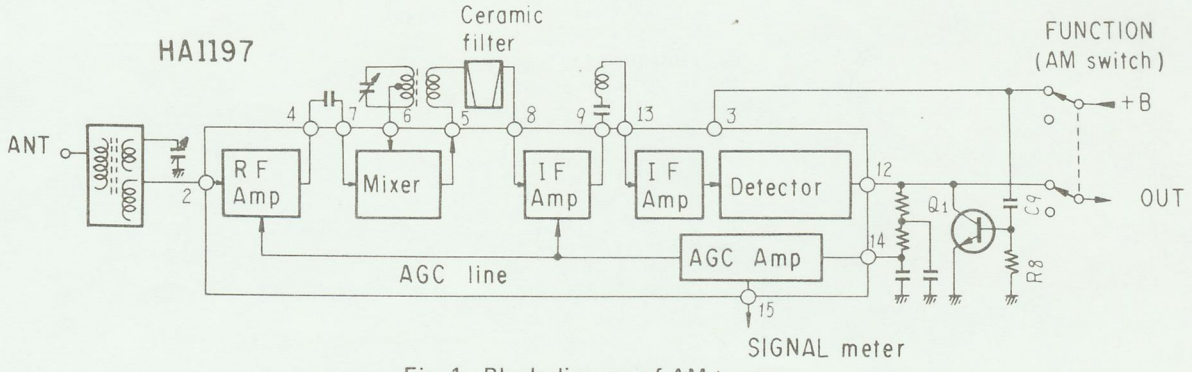

Fig. 1 Block diagram of AM tuner

PA1001-A contains a PLL VCO circuit, double-balance type differential demodulator with NFB amplifier, and pilot auto-cancel circuit to improve the distortion characteristics, frequency response, and S/N.

The nonlinear distortion produced at the demodulator has been improved by adding the NFB amplifier to the double-balance type differential demodulator.

The pilot auto-cancel circuit eliminates carrier leakage (19kHz), without a loss of demodulated signal frequency response.

Moreover, since the cancel signal level tracks the input pilot signal level, the rejection ratio does not drop even if the input pilot signal level changes.

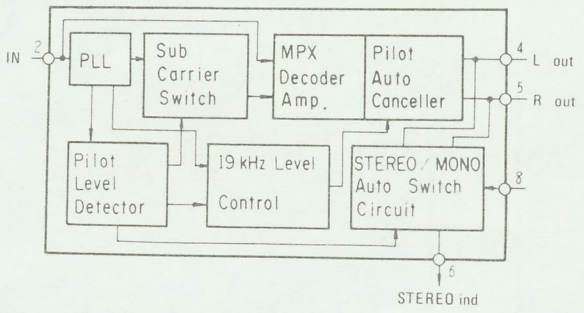

Fig. 3 Block diagram of PA1001-A

FM Output Amplifier

The FM output amp is an IC (PA1002-A). PA1002-A contains an AF amp. muting gate circuit and power ON/OFF muting control circuit. Its block diagram is given in Fig. 4.

The AF amp. is a differentially coupled NFB amp. featuring excellent dynamic range, S/N and distortion characteristics. A de-emphasis characteristic is obtained by providing a frequency selection characteristic at the NFB loop of this amp.

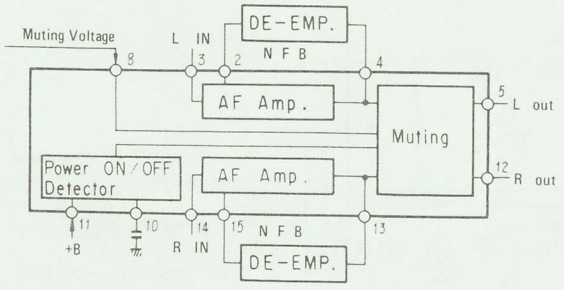

Fig. 4 Block diagram of PA1002-A

The muting circuit electronically grounds the signal circuit when a control voltage of 1.4V or greater has been applied to pin 8 of the PA1002-A. This control voltage is applied from pin 12 of the PA3001-A thru the MUTING switch. A 1.4V DC voltage is generated at pin 12 of the PA3001-A when de-tuned more than ±70kHz and at weak inputs (antenna input conversion 5μV or less).

6.2 AF SECTION

MIC Input Circuit

PHONO 2 is switched over to MIC when the microphone plug is inserted in to the MIC jack. This input circuit is equipped with an inverse RIAA curve designed to counteract the phono equalizer amplifier circuit.

PHONO 1 Input Capacitance Switching Circuit (Fig. 5)

The PHONO 1 input circuit includes an input capacitance switching stage which permits the user to select the optimum load capacitance for the phono cartridge being employed.

When C is excluded, the input capacitance of the circuit shown in Fig. 5 is 100pF. The capacitance of C may be set to either 0, 100, 200, or 300pF, thereby making the input load capacitance 100, 200, 300, or 400pF.

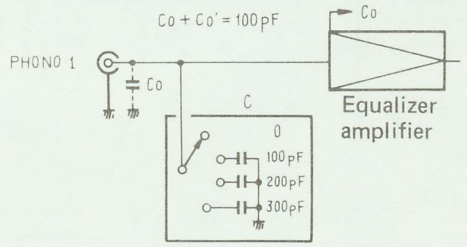

Fig. 5 PHONO 1 input capacitance switching circuit

Equalizer Amplifier

This is a 3-stage direct-coupled equalizer amplifier with a first-stage differential amplifier and final-stage pure complementary SEPP.

The role of the differential amplifier is to amplify the signal, and to stabilize the DC balance of the output neutral point. The bootstrap circuit in the second stage ensures sufficient gain to drive the final stage composed of a pure complementary SEPP circuit for a wide dynamic range and low output impedance. The RIAA equalization curve is produced by an NFB circuit employing 1%-error metal film resistors and 2%-error polypropylene capacitors, resulting in a equalization deviation of ±0.2dB (20Hz ~ 20kHz).

Flat Amplifier

The first stage of this 2-stage direct-coupled flat amplifier is equipped with a FET for higher input impedance. Ample NFB also permits an lower output impedance. As a result, there is little change in noise level when the VOLUME control resistance is altered, and there is also sufficient power to drive the NFB-type tone control circuits connected to the following stage:

NOTE:
Since the input impedance of the NFB tone control circuits is relatively low, there will be a certain amount of change when the variable resistor is rotated.

Tone Controls

The SX-1280 features two pairs of tone control circuits (twin tone controls), each with a different turnover frequency. The main tone controls are similar to other regular tone controls, while the sub tone controls permit variation of the frequency response at te very high and very low ends. Both main and sub tone controls apply C-B feedback to a single transistor amplifier, with frequency selection provided within the feedback loop, and the frequency response altered when these frequencies are changed.

All of these circuits may be by-passed by simply putting the TONE switch into the OFF position.

Filter Circuits

The filters employed in this receiver are −12dB/octave NFB-type active filters. By coupling the emitter-follower to RC passive filters, peaks have been obtained in the region of the cut-off frequencies, thereby sharpening the "knee characteristics" of the RC passive filters.

Power Amplifier (Fig. 6)

The first stage consists of a PNP dual transistor differential amplifier (Q_2) which loads the current mirror circuit (Q_3) to obtain high stable gain even in the high frequency range. The pre-driver stage (Q_4) operates with the constant current circuit (Q_5) as the load, amplifying the voltage to the required level. With a 3-stage Darlington connection in the power stage, and a parallel push-pull circuit in the final stage, a power output level of 185W + 185W/8Ω (20Hz ~ 20kHz, T.H.D. less than 0.03%) has been obtained.

The purpose of Q_1 is to equalize temperature changes in Q_2. By keeping the input base potential of Q_2 at a constant 0V, the Q_2 output neutral point potential will remain steady despite changes in temperature. Since this power amplifier is a DC amplifier, any DC voltages appearing at the Q_2 input base will be amplified and passed to the output. In order to avoid this, the drop in potential across R_1 due to the Q_2 input base current, is designed to be absorbed by the Q_1 base current, thereby maintaining the Q_2 input base potential constant at 0V.

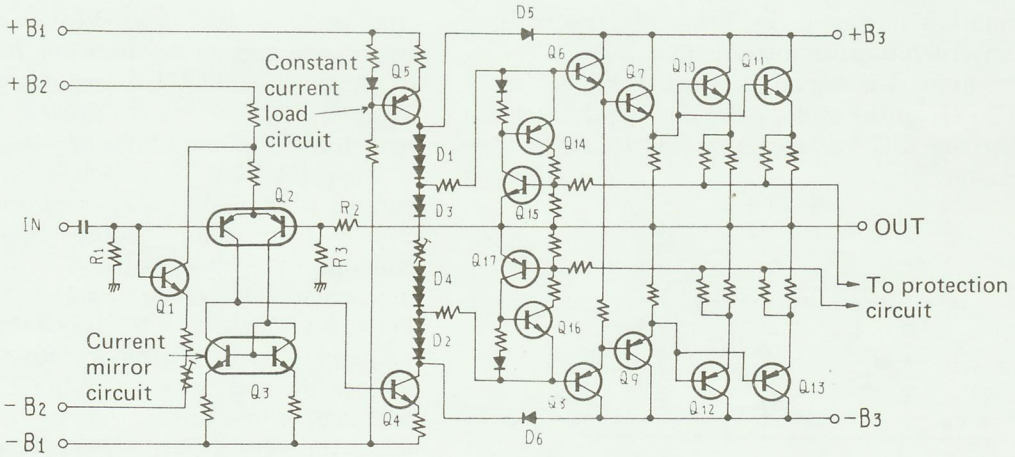

Fig. 6 Power amplifier circuit

Q_{14} to Q_{17} constitutes the power limiter stage. This stage measures the current flowing through the power transistors by means of the voltage produced by the power transistor emitter resistance. If the load impedance drops below 4 ohms, or the output level exceeds 180 watts, $Q_{14} \sim Q_{17}$ are activated, thereby limiting the drive voltage. Q_{14} and Q_{15} operate for positive half-cycles, and Q_{16} and Q_{17} for negative half-cycles.

D_1, D_2, D_5, and D_6 limit the drive voltage to prevent drive voltages in excess of a fixed level from being applied to the power stage, thereby avoiding clipping in the power stage, and the generation of oscillations.

NOTE:
If an excessively high drive voltage is applied to the power stage, the D_5 and D_6 anode peak voltage will exceed the power stage power supply voltage, thereby activating D_5 and D_6, and limiting the drive voltage.

Meter Amplifier (Figs 7, 8)

In order to indicate the 0.01W—400W range with one meter without range switching, a logarithmic indication type meter must be employed and the input signal must be logarithmically compressed. The meter amplifier circuit is shown in Fig. 7. This circuit consists of a logarithmic compression circuit and a meter drive circuit. The output signal of the power amplifier is applied to the logarithmic compression circuit, and its dynamic range is compressed. The principles of the logarithmic compression circuit are given in Fig. 8. The output voltage of this circuit is the value divided by R_{13} and Z. The attenuation at low signal input is reduced and the attenuation at large signal input is increased, by using the rise of the diode current-voltage characteristic at Z.

The compressed signal is shaped by D_5 and applied to Q_1 of the meter drive circuit. Q_1 current amplifies the DC voltage from D_5 to drive the power meter.

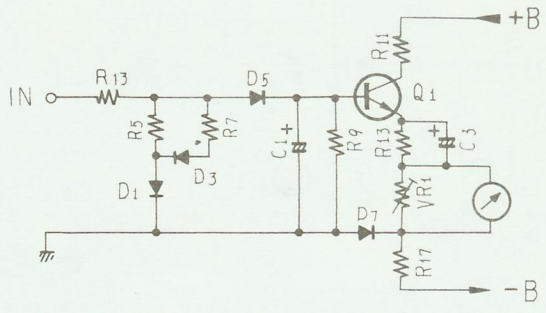

Fig. 7 Schematic diagram of meter amplifier

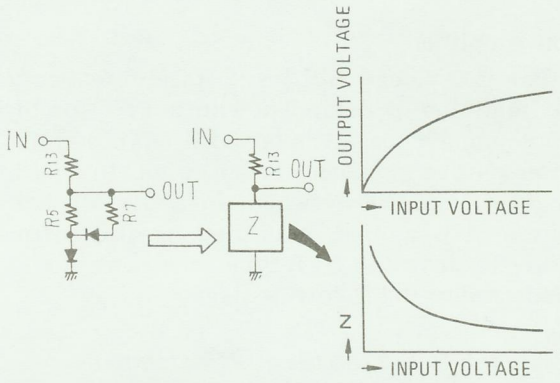

Fig. 8 Schematic diagram of logarithmic compressor

6.3 POWER SUPPLY CIRCUIT

The L and R channels in the power stage are both equipped with independent coils, bridge rectifiers, and a pair of 15000μF capacitors for independent supply of ±76V.

The class A amplifier circuits (equalizer amp, flat amp, tone control circuit, filter amp, first stage of the power amp, and the pre-driver stage) are supplied with ±68V and ±32V via a coil, bridge rectifier, and voltage regulator stage independent of the power stage.

The tuner section is supplied with +13.5V via lamp coils, voltage multiplier rectifier, and voltage regulator stage.

Surge Current Suppressor Circuit (Fig. 9)

The power supply stage in this equipment employs toroidal transformers of low internal resistance, and 4 high capacitance (15000μF) electrolytic capacitors for smoothing purposes. Therefore without any effective countermeasures, a sudden large surge of current would flow once the POWER switch was turned on, resulting in possible damage to fuses, the POWER switch itself, and other components. In order to prevent this, a surge current suppressor circuit has been incorporated.

When the POWER switch is turned ON, the AC current is applied to T (power transformer) via R_1 and the micro temp (thermal fuse). The secondary coil output in then rectified by diode D, resulting in capacitor C_1 being charged up, and relay R_L being activated. So until R_L is turned on, the voltage applied to the primary coil of T will be the voltage divided by R_1 and the T primary coil impedance, which means that the current flowing in when the POWER switch is first turned ON will be very small. The time required for R_L to be turned on will depend on the D and C_1 time constant Micro temp is a protection fuse designed to blow

upon detection of heat generated in R_1 if R_L should fail to turn on, or the T secondary coil fail to operate normally.

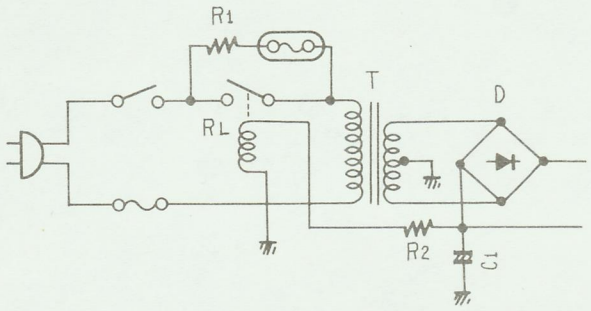

Fig. 9 Surge current suppressor circuit

6.4 PROTECTION CIRCUIT (Fig. 10)

The protection circuit featured in this equipment employs an IC (PA3004) recently developed by Pioneer. This IC includes DC voltage detection (a), +B voltage level detection (b), −B voltage level detection (c), AC voltage detection (d), C_T discharge switching (e), relay drive trigger switching (f), and constant current circuitry (g & h). This protection circuit is responsible for muting when the POWER switch is turned ON and OFF, speaker protection in case of an abnormal power amplifier neutral point potential, power amplifier protection in case of overloading, and speaker disconnection in case of protection circuit failure due to abnormal voltage in the power supply to the protection circuit IC.

POWER Switch Muting

The delaying action employed when the POWER switch is turned ON is determined by the time constants of the timing capacitor (C_T) and the constant current circuit (g). When the POWER switch is turned ON, +B is passed via (g) to charge up C_T. When fully charged, switch (f) will turn on, and a base current will flow from circuit (h) to Q_3, thereby turning the relay on.

When the POWER switch is turned OFF again, the AC voltage disappears immediately, resulting in switch (e) being turned on by the AC voltage detector (d), thereby discharging C_T. Consequently switch (f), Q_3, and the relay will all be turned off.

Abnormal Power Amplifier Neutral Point Potential

The occurrence of any abnormality in the power amplifier neutral point potential will be detected at (a), resulting in switch (e) being turned on. C_T will thus be charged up, and switch(f),Q_3, and the relay all turned off.

Protection Against Overload

If the bridge type detector circuit (Q_1) detects the presence of an overload condition, Q_2 will be charged on, resulting in a DC voltage being applied to detector (a). Switch (e) will thus turn on, and switch (f), Q_3, and the relay will all turn off.

Abnormal Protector Circuit Power Voltage

The power supply voltage level is detected by detectors (b) and (d). If the prescribed level is not attained, switch (e) will turn on, and switch (f), Q_3, and the relay all turn off.

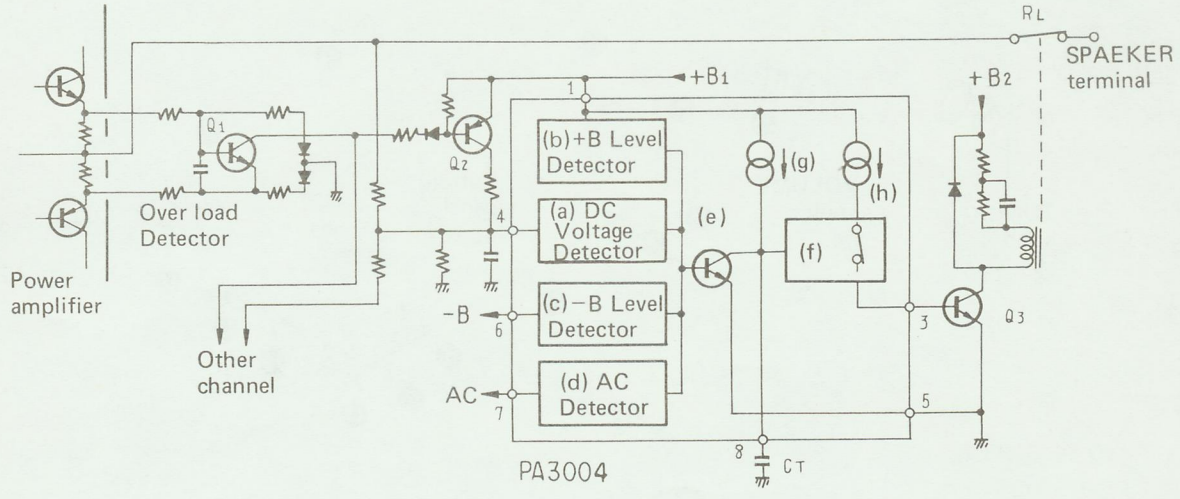

Fig. 10 Protection circuit

7. DISASSEMBLY

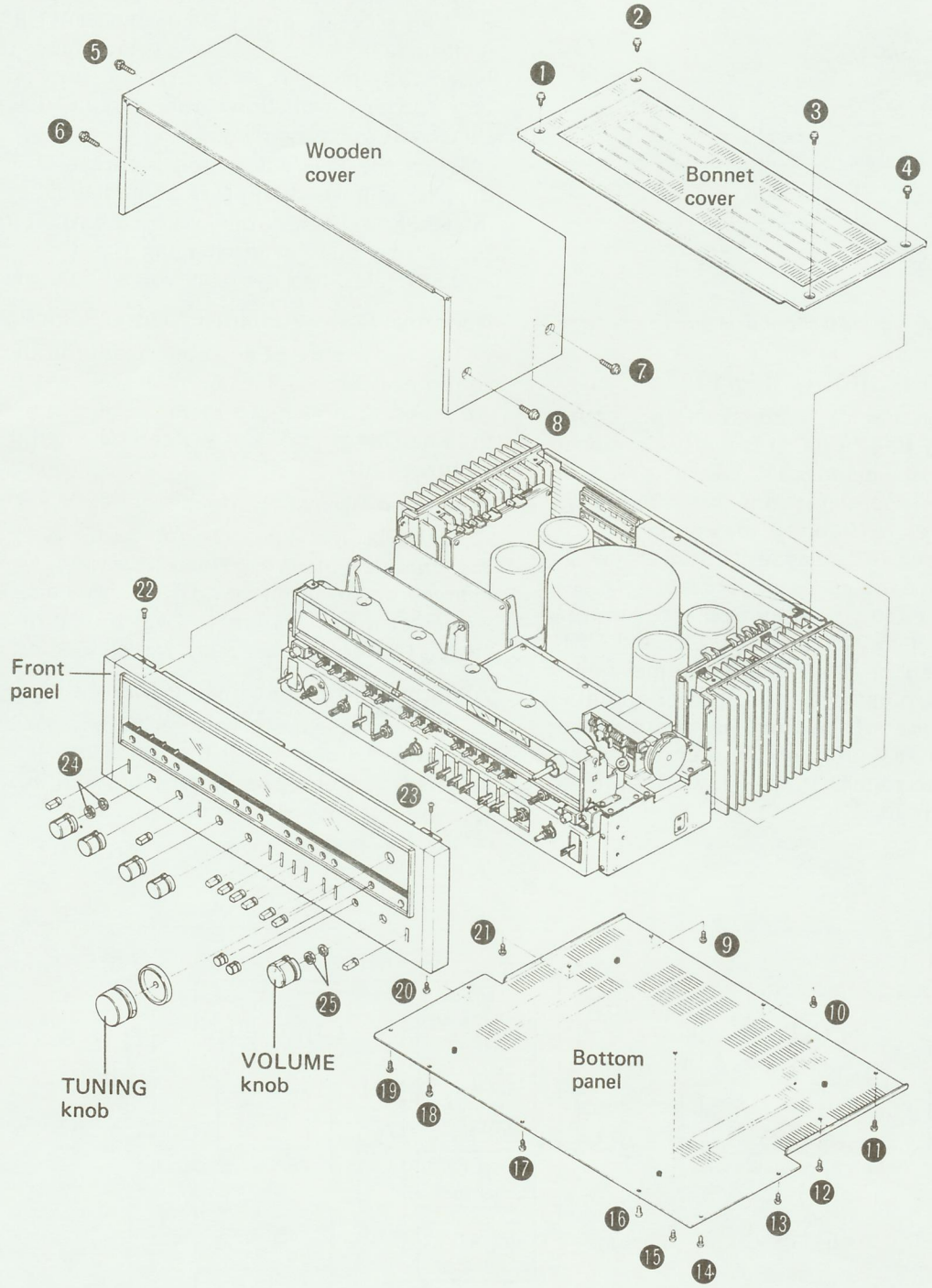

Fig. 11

Bonnet Cover

Remove the bonnet cover by undoing the 4 screws ❶ ~ ❹.

Wooden Cover

The wooden cover can only be removed after the bonnet cover has been removed. Undo the second set of 4 screws ❺ ~ ❽.

Bottom Plate

Undo 13 screws ❾ ~ ㉑ to remove the bottom plate.

Front Panel

To remove the front panel, first loosen the hexagonal screws in the VOLUME control and TUNING knobs, and then gently pull them off. All other front panel knobs are pulled off directly. Then undo the screws ㉒ and ㉓, and the pair of nuts and washers ㉔ and ㉕.

Power Amplifier and Heat Sinks (Fig. 12)

Undo the 4 screws ㉖ ~ ㉙ to remove the power amplifier and heat sinks.

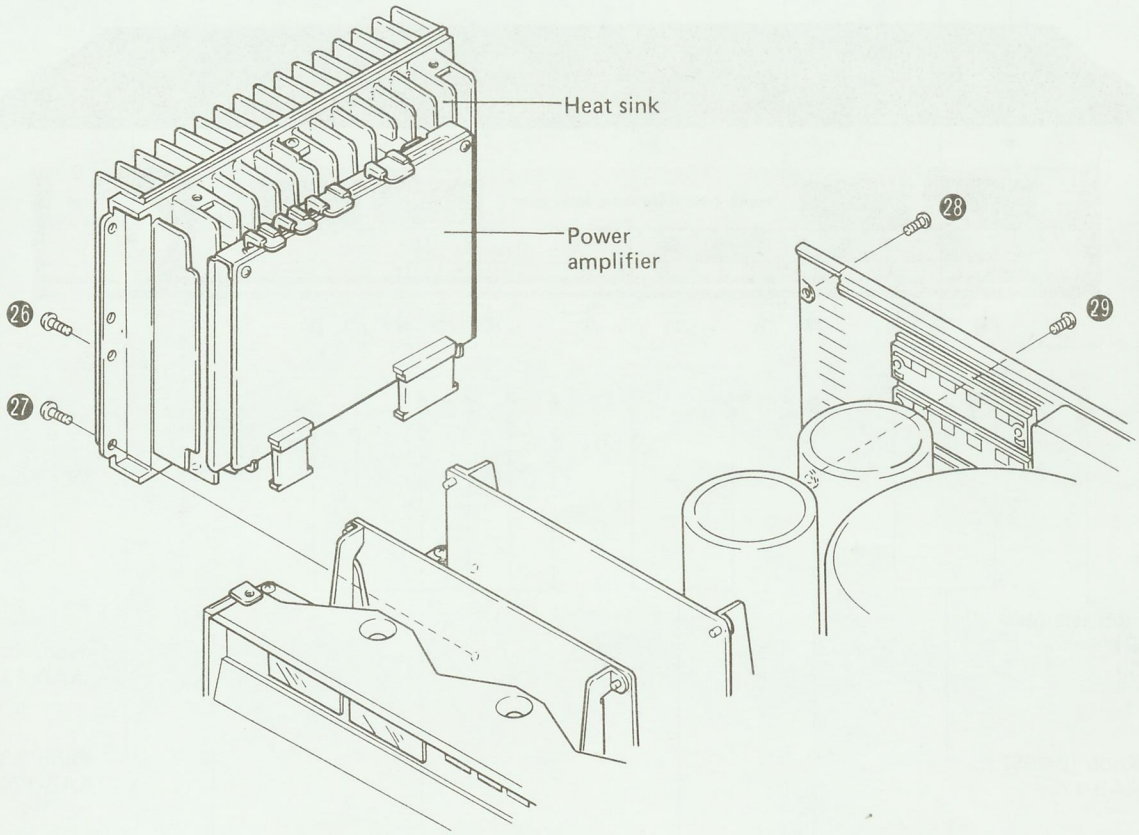

Fig. 12

8. PARTS LOCATION

8.1 FRONT PANEL VIEW

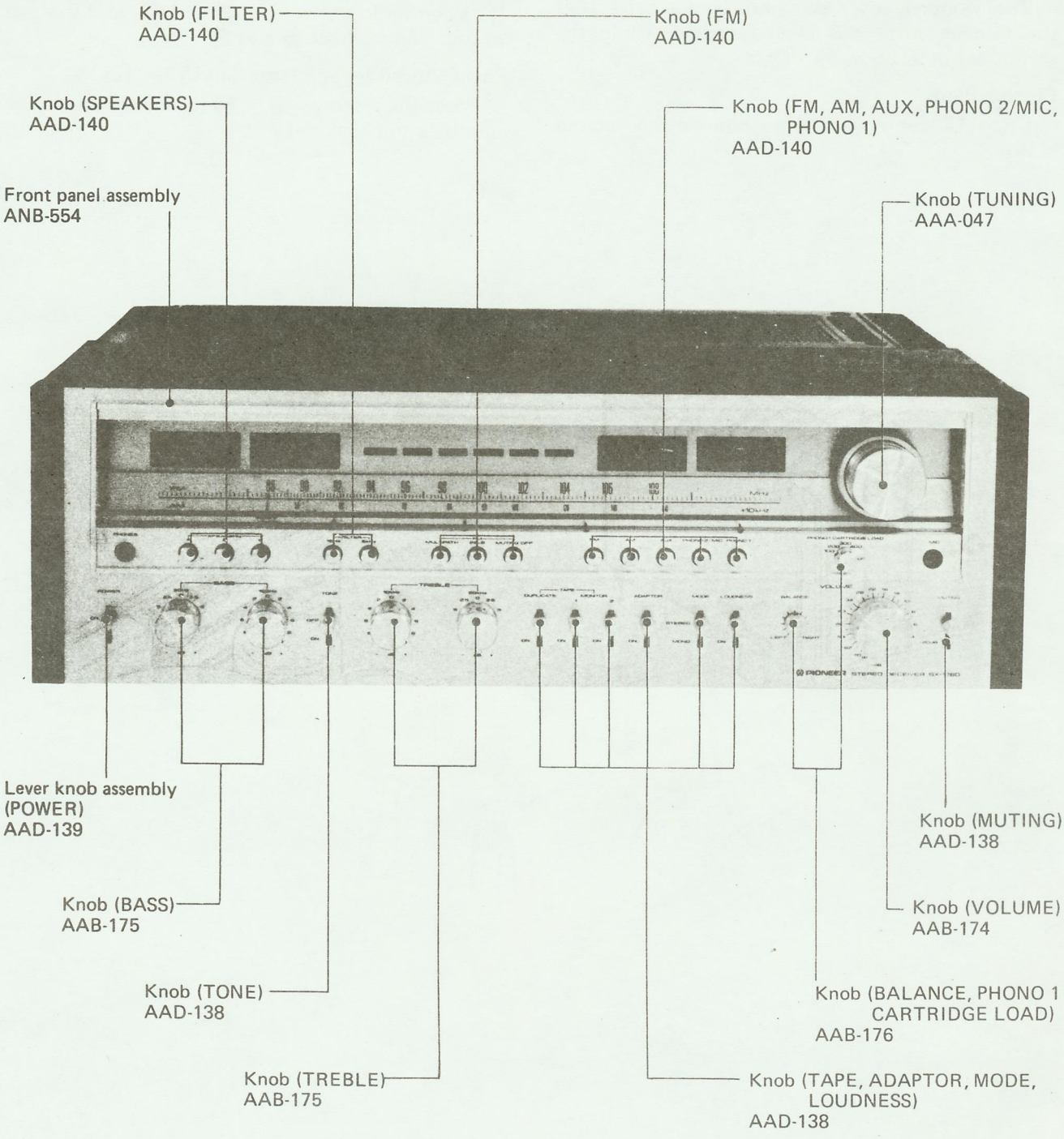

8.2 FRONT VIEW WITH PANEL REMOVED

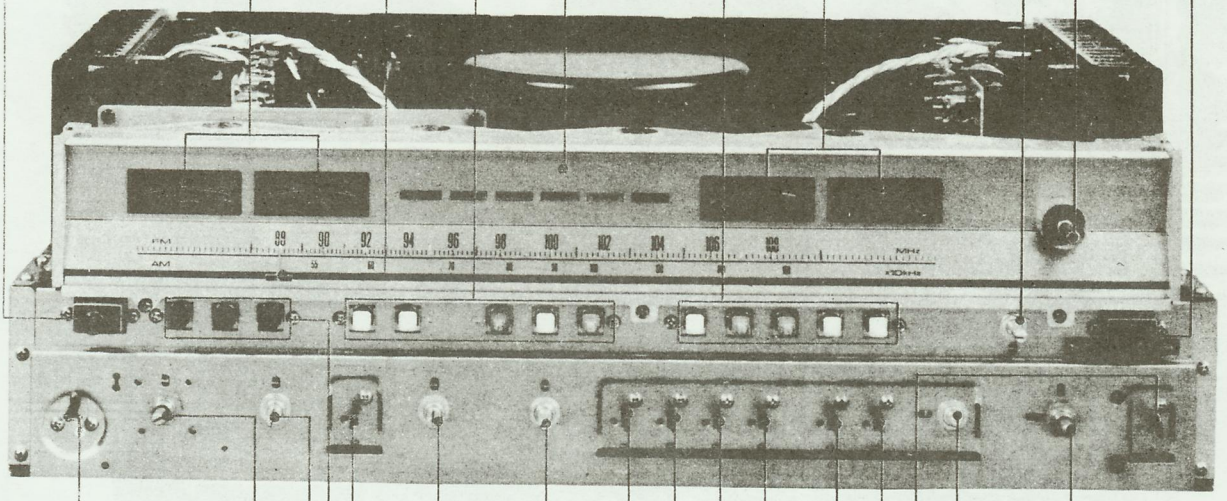

Dial panel
AAG-148

Push switch (LOW FILTER, HIGH FILTER, MULTIPATH, DE-EMPHASIS, FM MUTING)
ASG-127

Dial ponter assembly
AAF-065

Power meter
AAW-080

Phone jack (PHONES)
AKN-010

Push switch (FUNCTION)
ASG-126

Double meter
AAW-075

Rotary switch (CARTRIDGE LOAD)
ASE-001

Tuning shaft assembly
AXA-188

Phone jack (MIC)
AKN-012

Power switch (POWER)
ASK-080

Variable resistor (BASS 50Hz)
ACW-101

Variable resistor (BASS 100Hz)
ACW-102

Push switch (SPEAKERS)
ASG-132

Lever switch (TONE)
ASK-144

Variable resistor (TREBLE 10kHz)
ACW-103

Variable resistor (TREBLE 20kHz)
ACW-104

Lever switch (DUPLICATE)
ASK-146

Lever switch (ADAPTOR, MONITOR)
ASK-145

Lever switch (LOUDNESS, MODE)
ASK-144

Variable resistor (BALANCE)
ACV-190

Variable resistor (VOLUME)
ACW-116

8.3 TOP VIEW

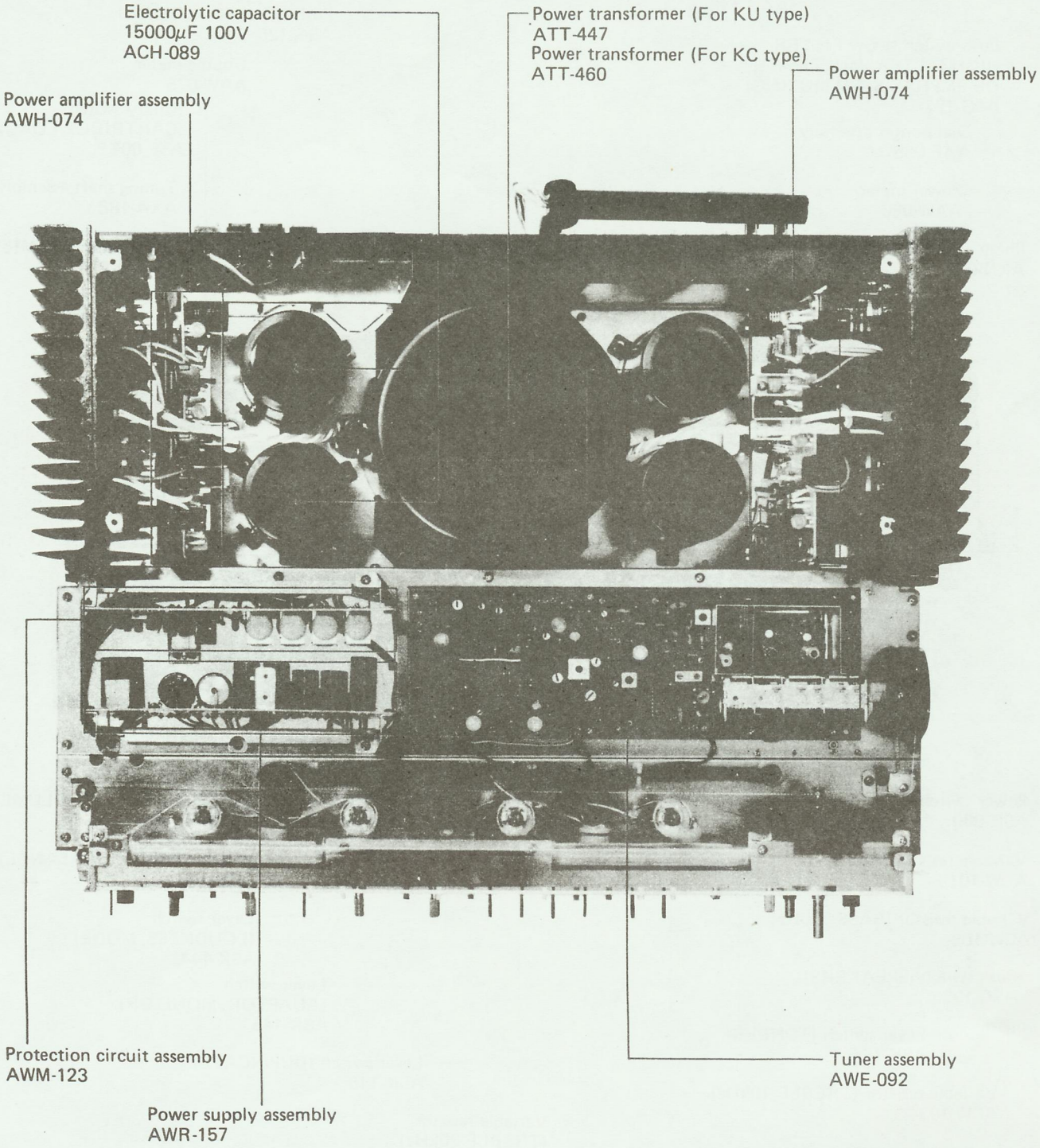
Electrolytic capacitor
15000μF 100V
ACH-089
Power transformer (For KU type)
ATT-447
Power transformer (For KC type)
ATT-460
Power amplifier assembly
AWH-074
Power amplifier assembly
AWH-074
Protection circuit assembly
AWM-123
Power supply assembly
AWR-157
Tuner assembly
AWE-092

8.4 BOTTOM VIEW

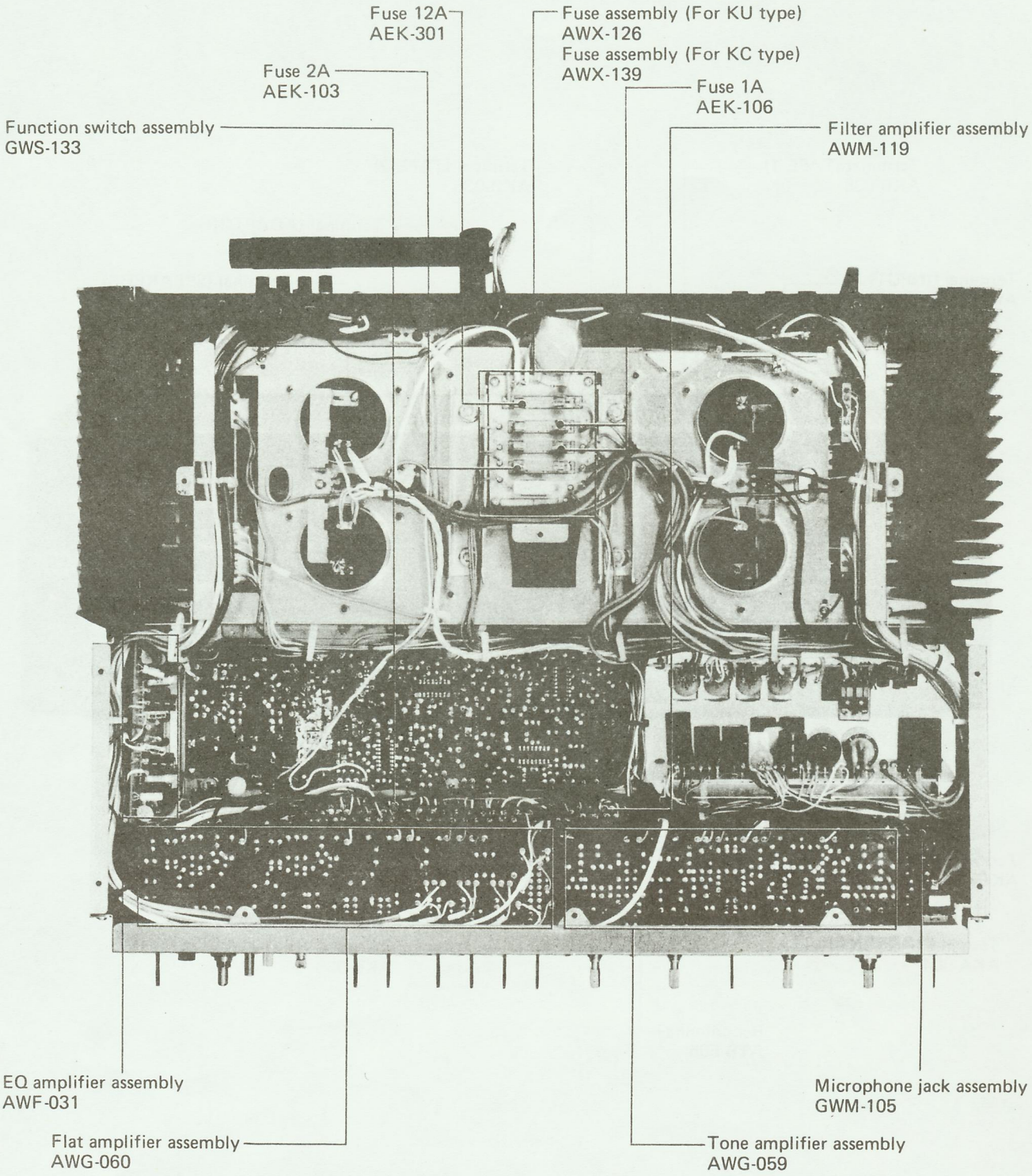

8.5 REAR PANEL VIEW

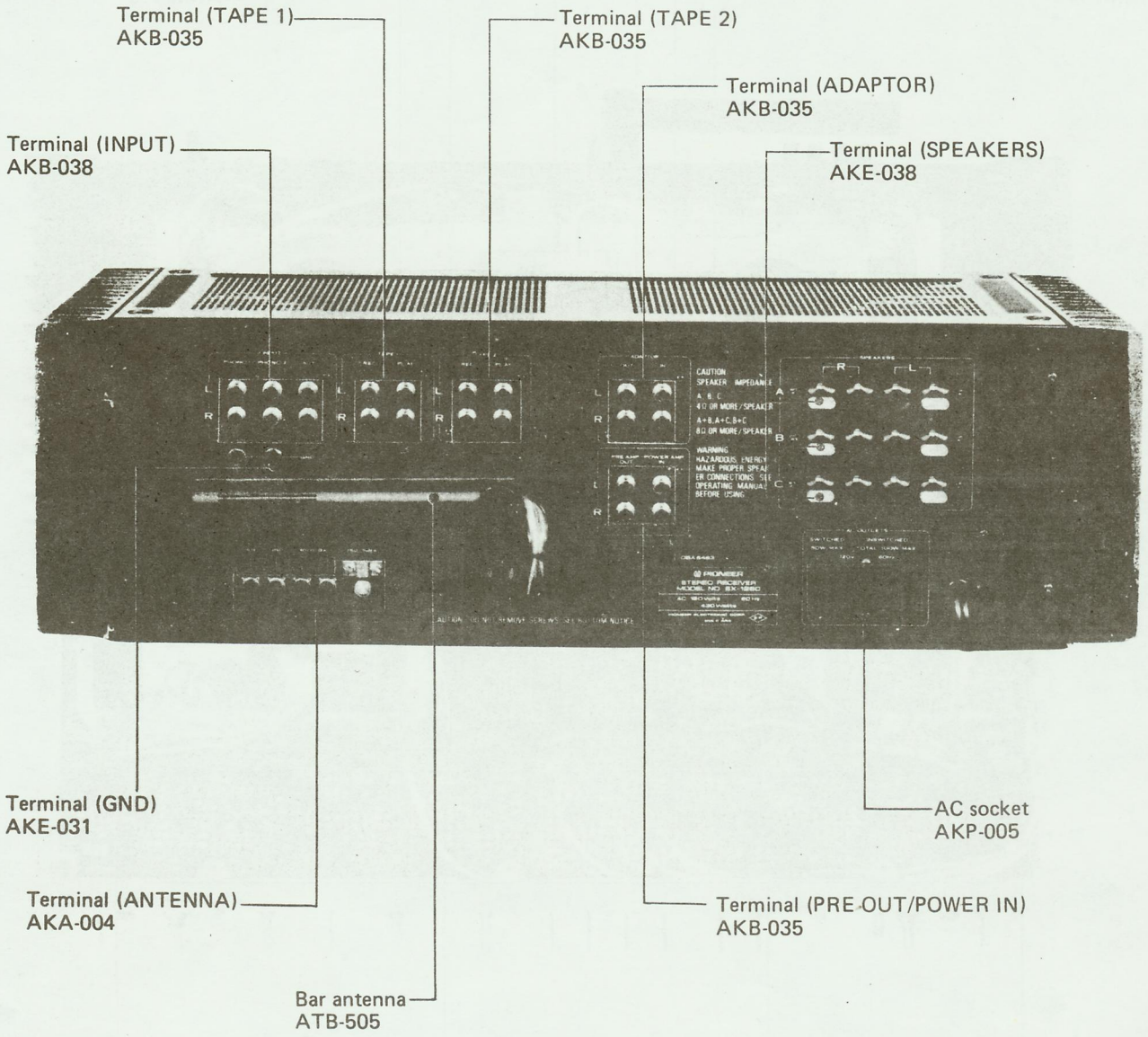

9. DIAL CORD STRINGING

1. Remove the bonnet cover, wooden cover and front panel as described in the "Disassembly" section on page 18.
2. Undo the 3 screws ㉚ ~ ㉜ to remove the blind sash (Fig. 13).
3. Loosen screw ㉝, and then remove the tuning drum from the tuning capacitor shaft (Fig. 14).
4. Tie one end of the cord to the peg on the inside of the tuning drum (Fig. 14).
5. With the tuning capacitor blades turned full in, rotate the tuning drum around the variable capacitor shaft so that screw ㉝ is positioned at the apex (i.e. facing straight up).
6. Lead the cord out through the gap in the tuning drum, make half a turn, and then pass the cord over the pulleys A, B, and C in that order. Wind the cord 3 times around the tuning shaft and pass it over pulley D; then make 2 windings around the tuning drum, and finally tie it to the spring, making sure there is sufficient tension in the cord (Figs. 15, 16).
7. Turn the tuning shaft to check that the drum and cord move smoothly and easily, and then cut off the remaining cord.
8. Turn the tuning shaft right back in the counter-clockwise direction (so that the variable capacitor blades are fully intermeshed).
9. Align the dial pointer with the starter point on the dial scale, and secure it firmly to the cord (Fig. 17).
10. Finally apply the locking paint to the cord securing positions (tuning drum projection and spring) and the dial pointer connection.

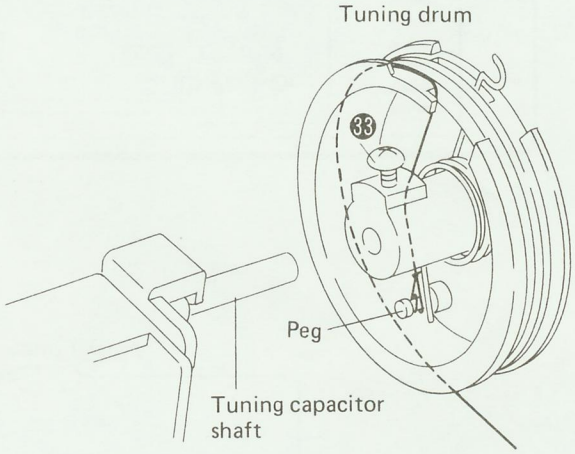

Fig. 14

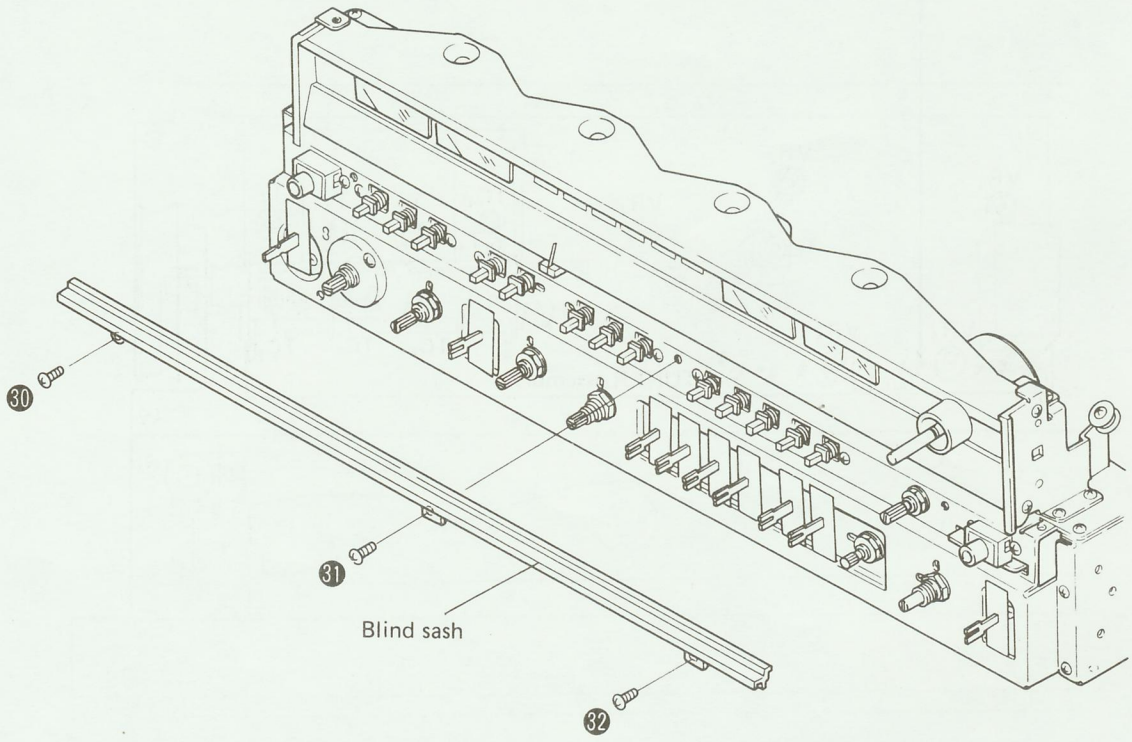

Fig. 13

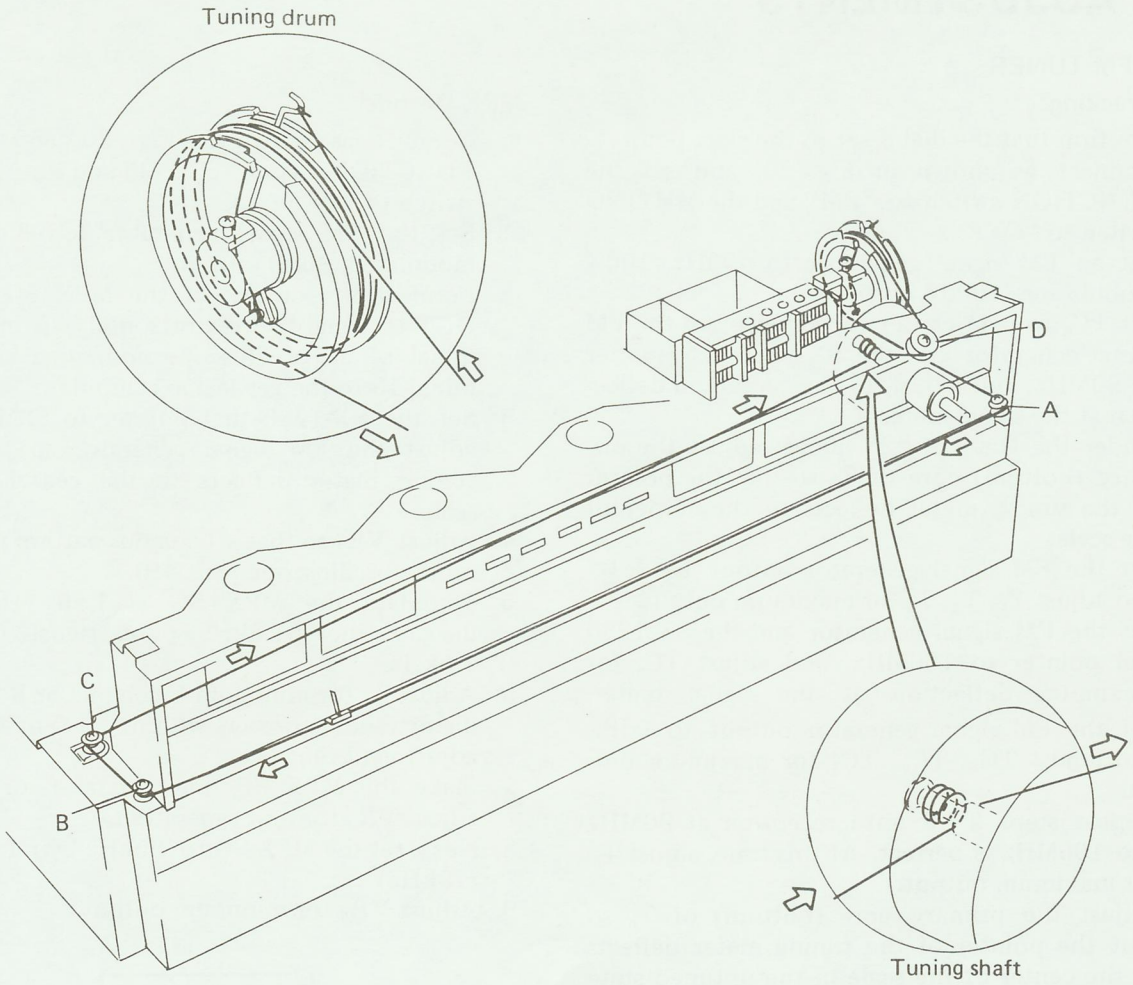

Fig. 15

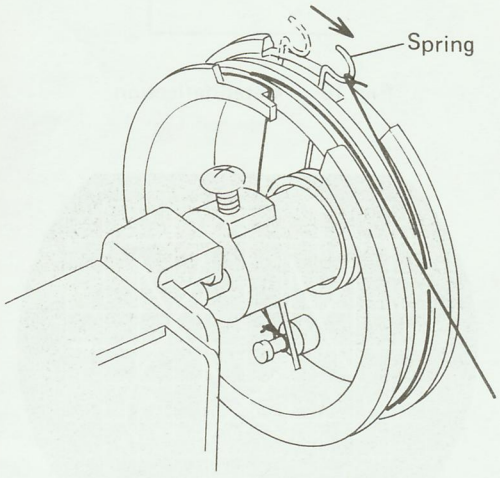

Fig. 16

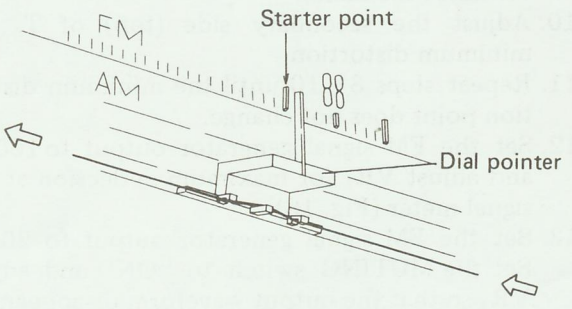

Fig. 17

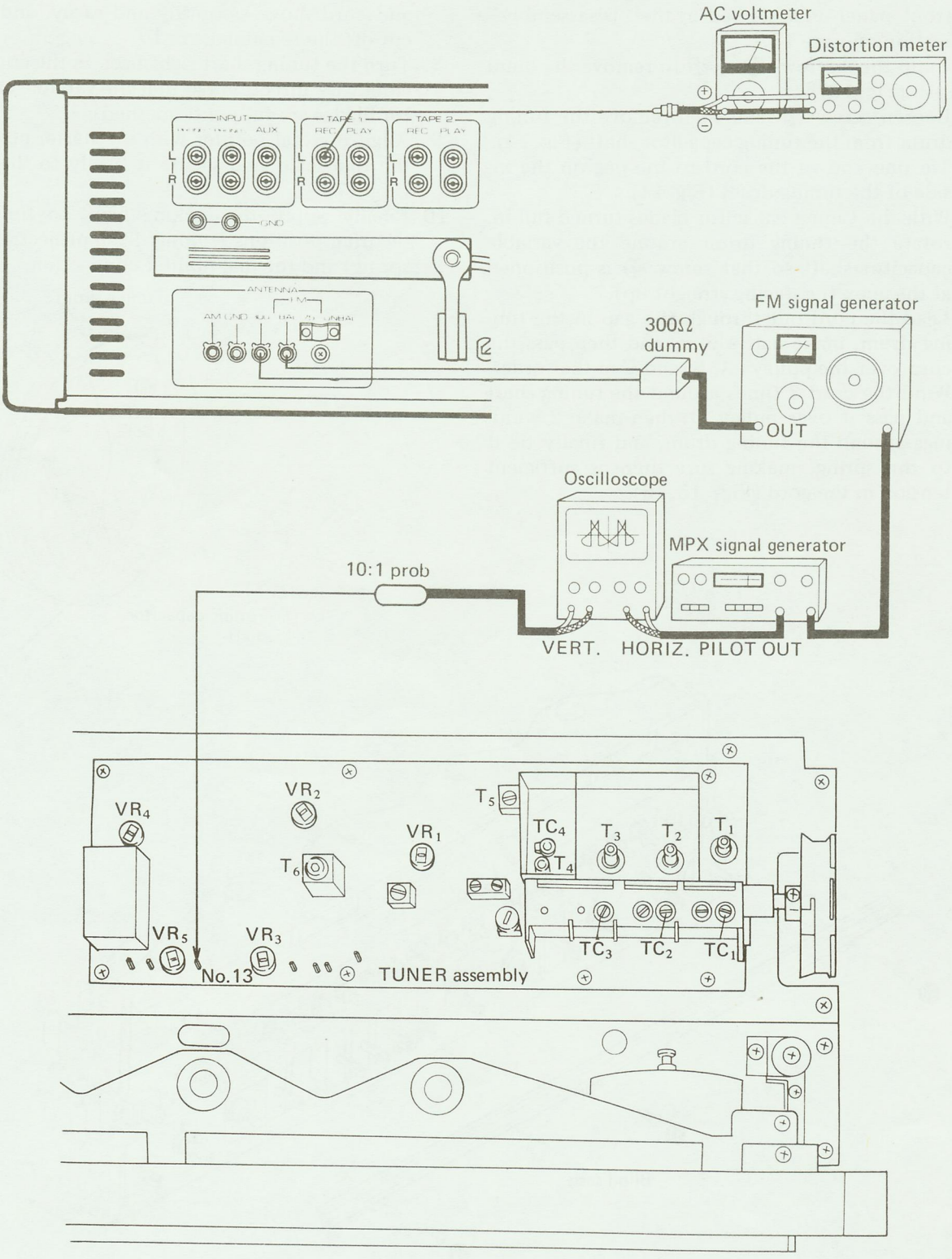
AC voltmeter
Distortion meter
INPUT
AUX
TAPE 1
REC PLAY
TAPE 2
REC PLAY
L
R
GND
ANTENNA
FM
AM GND
300Ω
dummy
FM signal generator
OUT
Oscilloscope
MPX signal generator
10:1 prob
VERT.
HORIZ.
PILOT OUT
VR4
VR2
VR1
T5
TC4
T3
T2
T1
T6
T4
VR5
VR3
TC3
TC2
TC1
No.13
TUNER assembly

Fig. 20

10. ADJUSTMENTS

10.1 FM TUNER

FM Tracking

- Confirm that the dial is set to the start point.
- Connect as shown in Fig. 20, and set the FUNCTION switch to "FM" and the MUTING switch to "OFF".

1. Set an FM signal generator to 400Hz, 100% modulation, 100dB output.
2. Set TC_4 to near center capacitance, set the FM signal generator and the SX-1280 dial pointer to 90MHz, and adjust T_4 for maximum deflection at the signal meter.
3. Under the state of "2" above, adjust the primary (bottom) core of T_6 so that the pointer of the tuning meter deflects to the cetner of the scale.
4. Set the FM signal generator output to 9dB, and adjust T_1, T_2, T_3 for maximum output.
5. Set the FM signal generator and the SX-1280 dial pointer to 106MHz, and adjust TC_4 for maximum deflection at the signal meter.
6. Set the FM signal generator output to 9dB, and adjust TC_1, TC_2, TC_3 for maximum output.
7. Repeat steps 2—6 until reception at 90MHz and 106MHz is perfect. At this time, adjust T_5 for maximum output.
8. Adjust the primary core (bottom) of T_6 so that the pointer of the tuning meter deflects to the center of the scale in the untuned state (noise only).
9. Set the FM signal generator output to 60dB, set the SX-1280 dial pointer to 98MHz, and tune the FM signal generator at the tuning meter. (Pointer of tuning meter deflects to the center of the scale).
10. Adjust the secondary side (top) of T_6 for minimum distortion.
11. Repeat steps 8—10 until the minimum distortion point does not change.
12. Set the FM signal generator output to 100dB, and adjust VR_2 for maximum deflection at the signal meter (Fig. 18).
13. Set the FM signal generator output to 20dB. Set the MUTING switch to "ON" and adjust VR_1 so that the output waveform disappears.

MPX Decoder

- Connect as shown in Fig. 20, and set the FUNCTION switch to "FM" and the MUTING switch to "OFF".

1. Set the FM signal generator to 98MHz unmodulated, 60dB output.
2. Connect the output of the MPX SG PILOT OUT terminal to the horizontal axis input terminal of an oscilloscope and tuner ass'y terminal 13 to the vertical axis input.
3. Set the SX-1280 dial pointer to 98MHz and adjust the FM signal generator so that the tuning meter deflects to the center of the scale.
4. Adjust VR_3 so that a Lissajous pattern is traced on the oscilloscope (Fig. 19).
5. Modulate the MPX SG at L+R (1kHz) to deviate the 67.5kHz pilot signal (19kHz) 7.5kHz.
6. Adjust T_5 for minimum L channel or R channel distortion. (However, within ±90° of the core adjustment range).
7. Make the MPX SG main signal L or R and adjust VR_4 for best separation.
8. Next, set the MPX SG to 7.5kHz by pilot signal (19kHz).
9. Adjust VR_5 for minimum output.

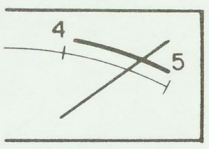

Fig. 18 Meter deflection

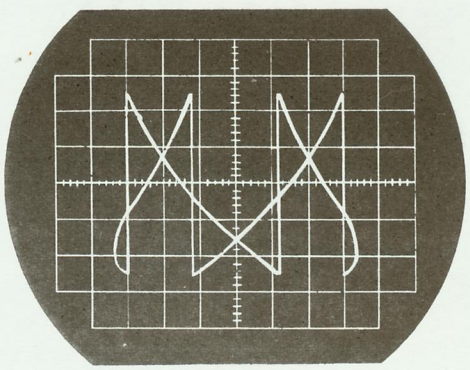

Fig. 19 Lissajous waveform

10.2 AM TUNER

1. Connect the AM signal generator (AMSG) to the AM ANTENNA terminal via a 1kΩ resistor (Fig. 21).
2. Turn the AM function switch ON.
3. Turn the DUPLICATE switch OFF, and connect an AC voltmeter to either the L or R TAPE 1 REC jack.
4. Apply a 400Hz, 30% modulated signal to AMSG, and set the output to 100dB.
5. Adjust the tuning dial indicator and AMSG frequency to 600kHz.
6. Adjust the T_7 core to provide maximum reading in the AC voltmeter.
7. Next readjust the tuning dial indicator and AMSG frequency to 1400kHz.
8. Adjust TC_6 (trimmer) to again provide maximum reading in the AC voltmeter.
9. Set AMSG to 30dB output level.
10. Return the tuning dial indicator and AMSG frequency to 600kHz.
11. This time adjust bar antenna core to provide maximum reading in the AC voltmeter.
12. Return the tuning dial indicator and AMSG frequency back to 1400kHz.
13. Adjust TC_5 (trimmers) to again provide maximum reading in the AC voltmeter.
14. Repeat steps 10 to 13 above until no further changes occur in the AC voltage reading at the 600kHz and 1400kHz positions.

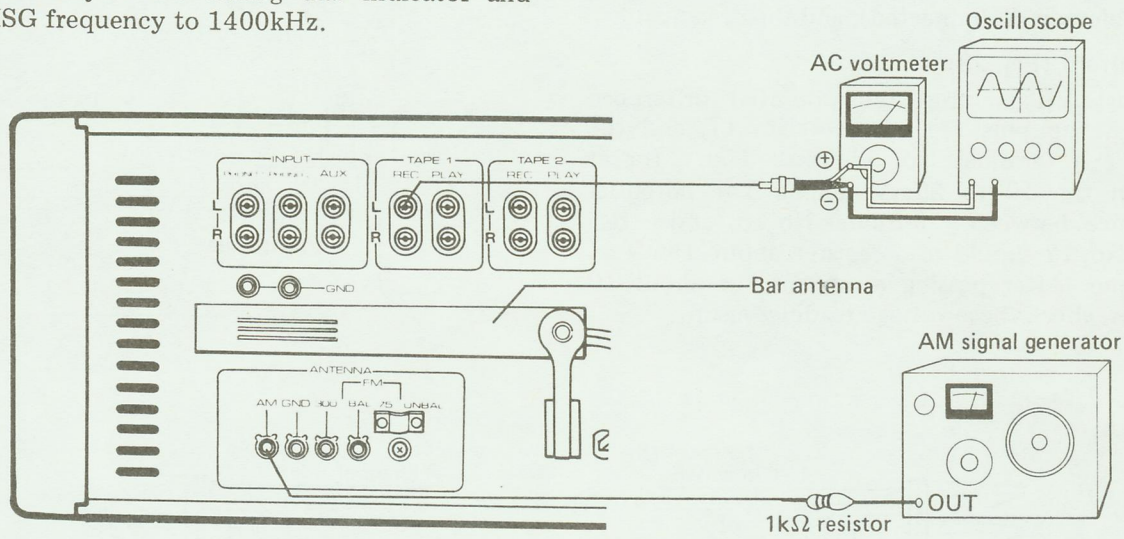

Fig. 21

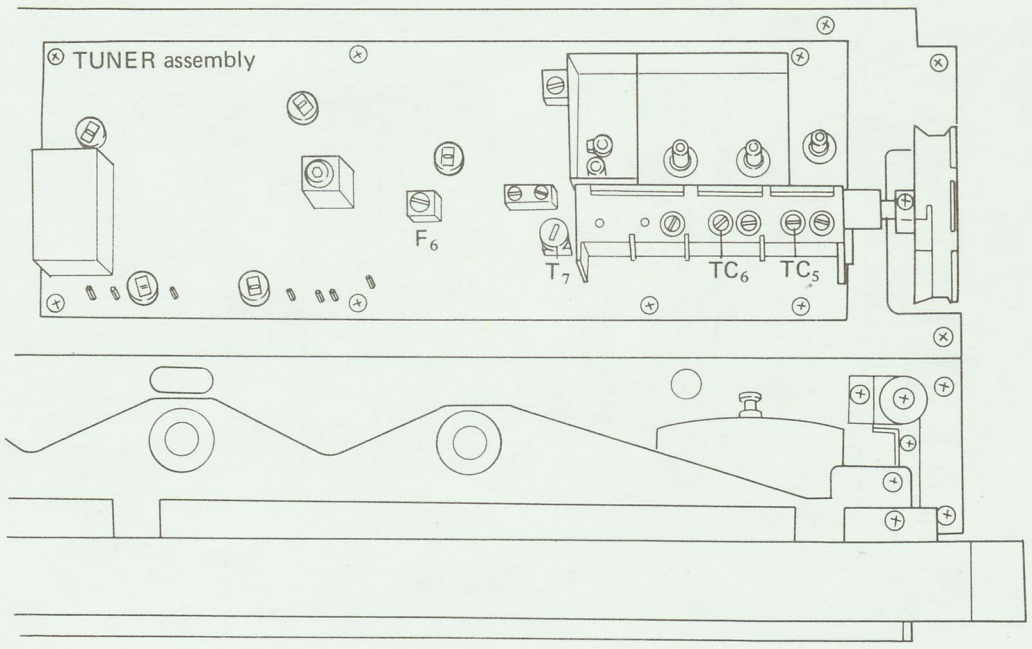

Fig. 22

10.3 POWER AMPLIFIER

Turn VR_2 (L and R) fully around in the counter-clockwise direction, but set VR_1 (L and R) to the center positions. Without any load or input signal, turn the POWER switch ON.

Since the same configuration is used for both left and right channels of the SX-1280 power amplifier assembly, the following adjustments apply to both channels.

DC Balance (Fig. 23)

Adjust VR_1 so that the potential differnence between terminals No. 14 and ground reads zero volts (to within ±20mV). If this level cannot be attained, disconnect the jumper leads A (or reconnect if already disconnected), and then readjust.

Idle Current (Fig. 23)

Adjust VR_2 so that the potential differnece between the plus (+) terminal No. 17, and the minus (−) terminal No. 11 reads 15mV (or at least in the 10 to 25mV range). The potential difference between + terminal No.18, and − terminal No. 12 should also register about 15mV at this time. After passing a current for about 10 minutes, check these voltage readings again.

10.4 METER AMPLIFIER

Apply a 1kHz signal to the POWER AMP IN terminals (or any other power amplifier input terminals). Adjust the level of this input signal so that the voltage on the output terminals (SPEAKERS) reads 37.95V rms (AC). Then adjust VR_2(L) and VR_1(R) of the meter amplifier assembly so that the output power meters read 180 watts.

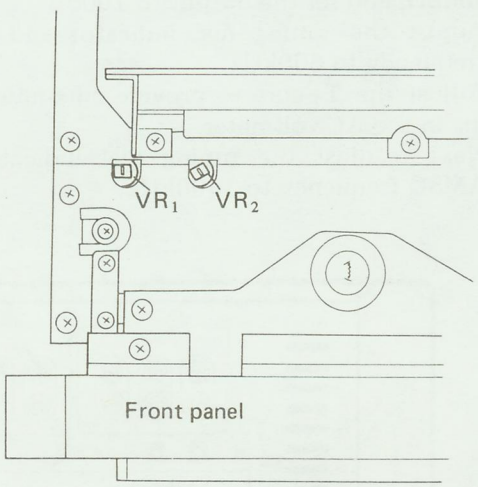

Fig. 24

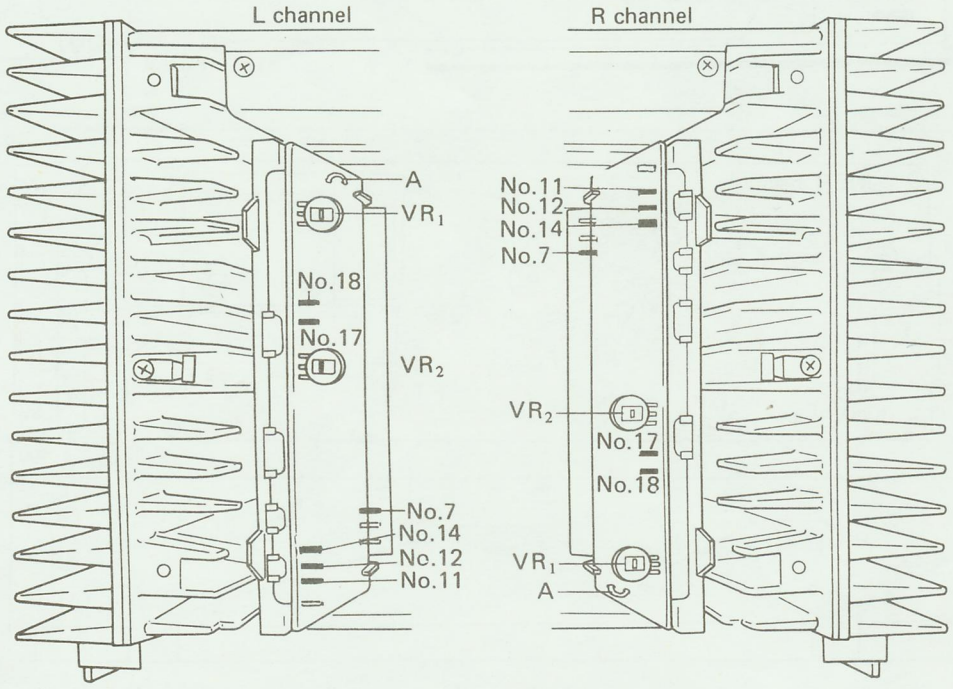

Power amplifier

Fig. 23

11. EXPLODED VIEWS

11.1 EXTERNAL PART

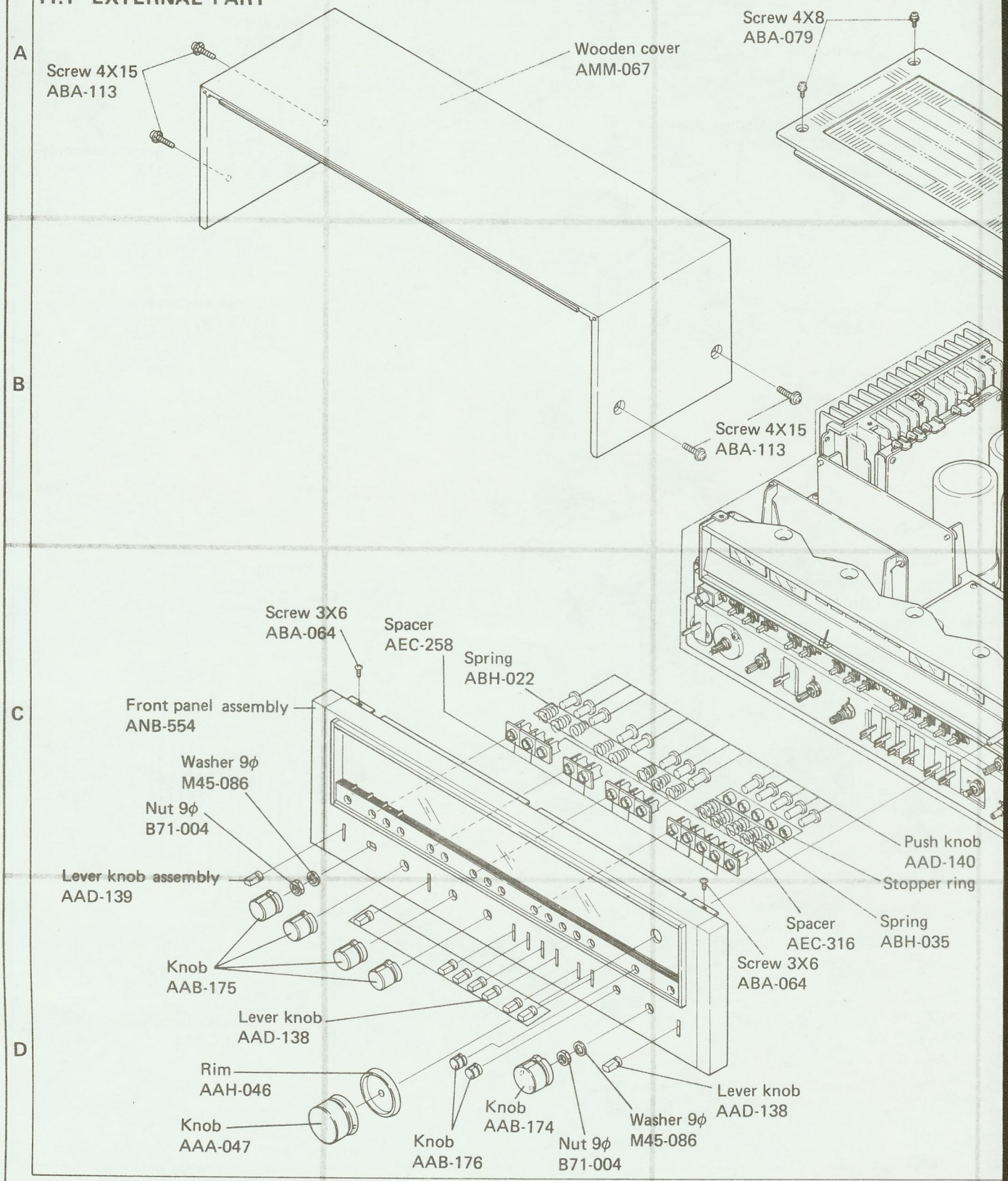

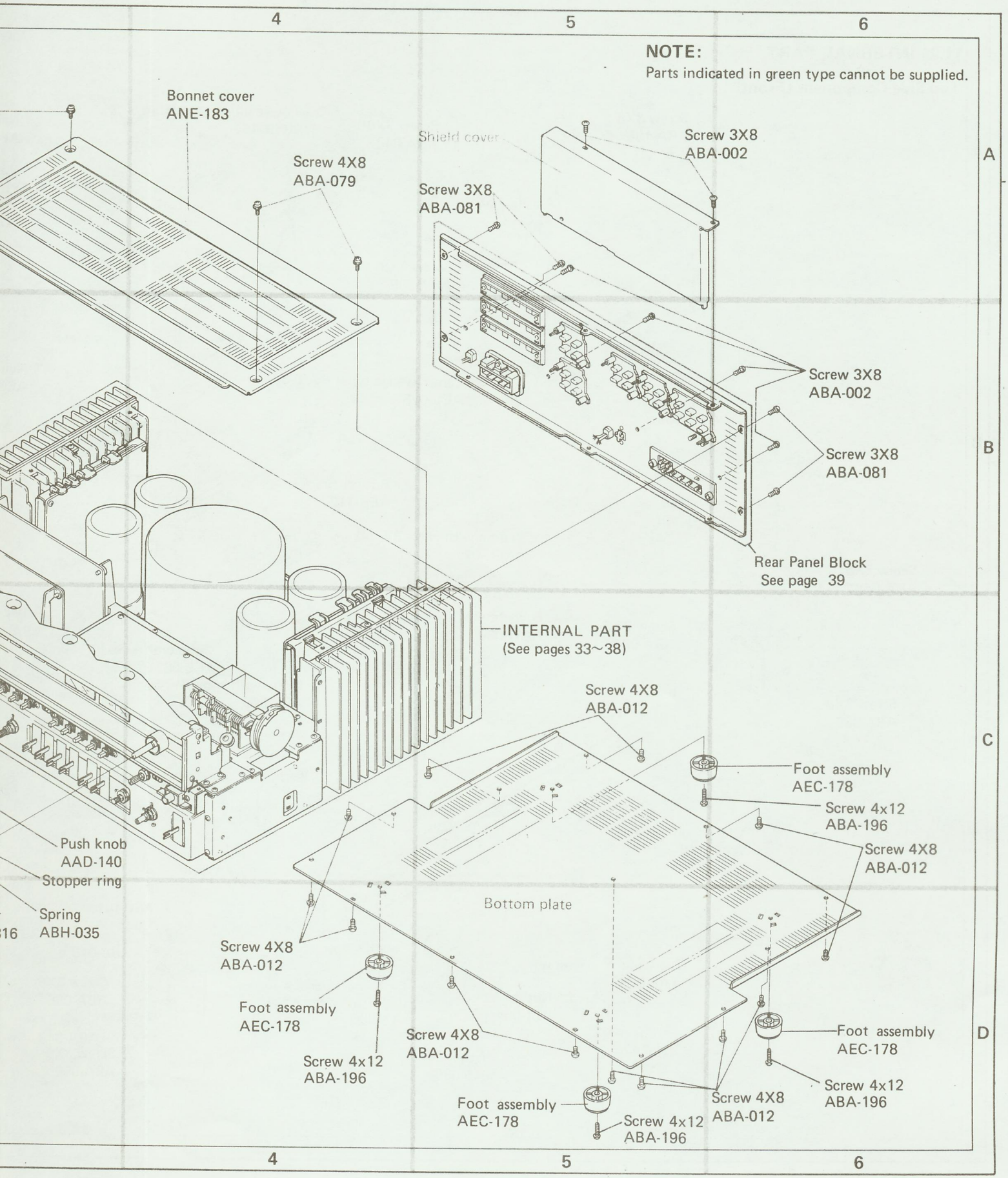
4
5
6
NOTE:
Parts indicated in green type cannot be supplied.
Bonnet cover
ANE-183
Screw 4X8
ABA-079
Shield cover
Screw 3X8
ABA-002
Screw 3X8
ABA-081
Screw 3X8
ABA-002
Screw 3X8
ABA-081
Rear Panel Block
See page 39
INTERNAL PART
(See pages 33~38)
Screw 4X8
ABA-012
Foot assembly
AEC-178
Screw 4x12
ABA-196
Screw 4X8
ABA-012
Push knob
AAD-140
Stopper ring
Spring
ABH-035
Bottom plate
Screw 4X8
ABA-012
Foot assembly
AEC-178
Screw 4x12
ABA-196
Screw 4X8
ABA-012
Foot assembly
AEC-178
Screw 4x12
ABA-196
Foot assembly
AEC-178
Screw 4X8
ABA-012
Screw 4x12
ABA-196
A
B
C
D
4
5
6

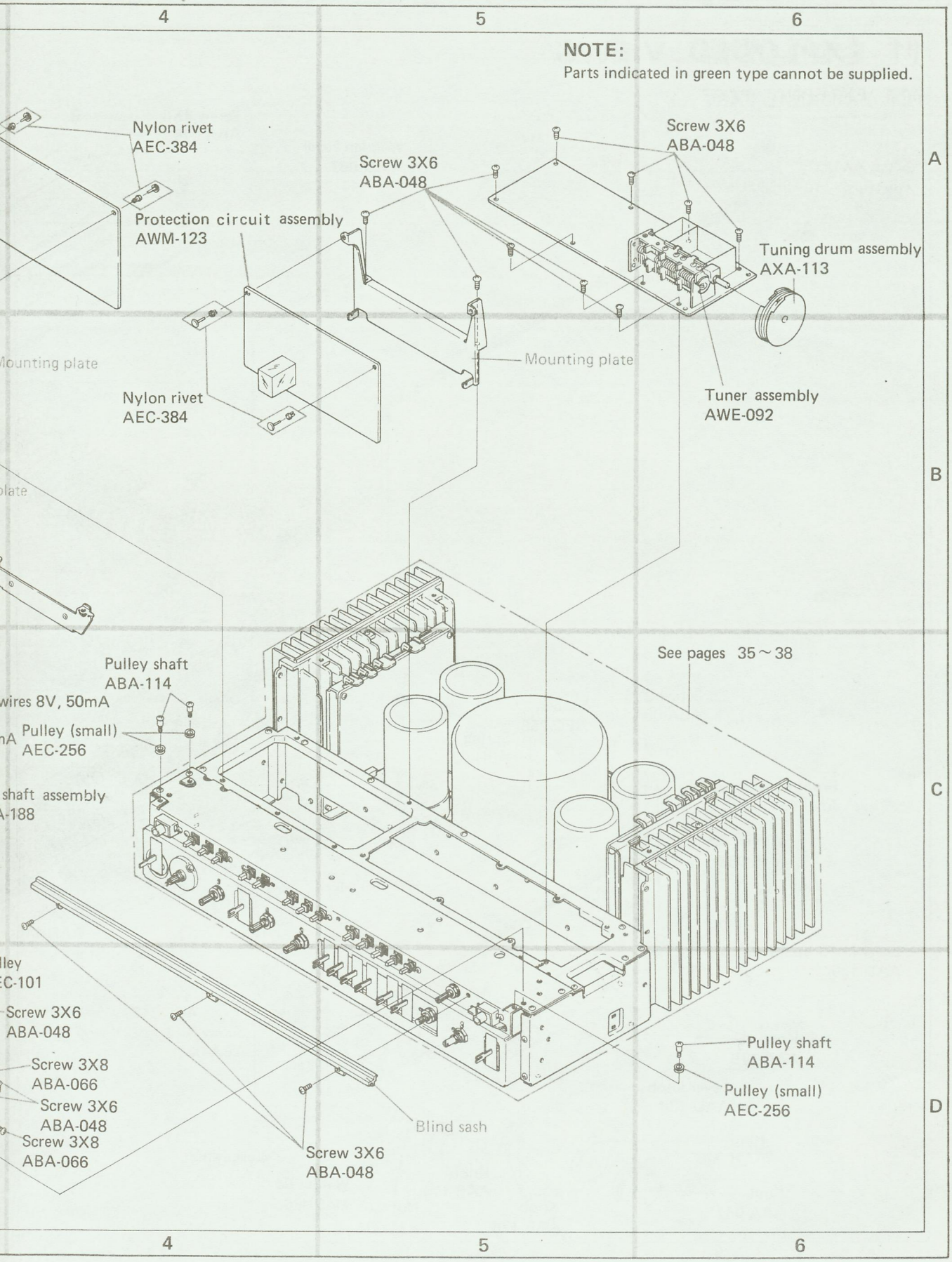

4
5
6
NOTE:
Parts indicated in green type cannot be supplied.
Nylon rivet
AEC-384
Screw 3X6
ABA-048
Screw 3X6
ABA-048
Protection circuit assembly
AWM-123
Tuning drum assembly
AXA-113
Mounting plate
Mounting plate
Nylon rivet
AEC-384
Tuner assembly
AWE-092
A
B
C
D
See pages 35～38
Pulley shaft
ABA-114
wires 8V, 50mA
Pulley (small)
AEC-256
shaft assembly
-188
lley
C-101
Screw 3X6
ABA-048
Screw 3X8
ABA-066
Screw 3X6
ABA-048
Screw 3X8
ABA-066
Blind sash
Screw 3X6
ABA-048
Pulley shaft
ABA-114
Pulley (small)
AEC-256

11.2 INTERNAL PART

Top Side Component (Front)

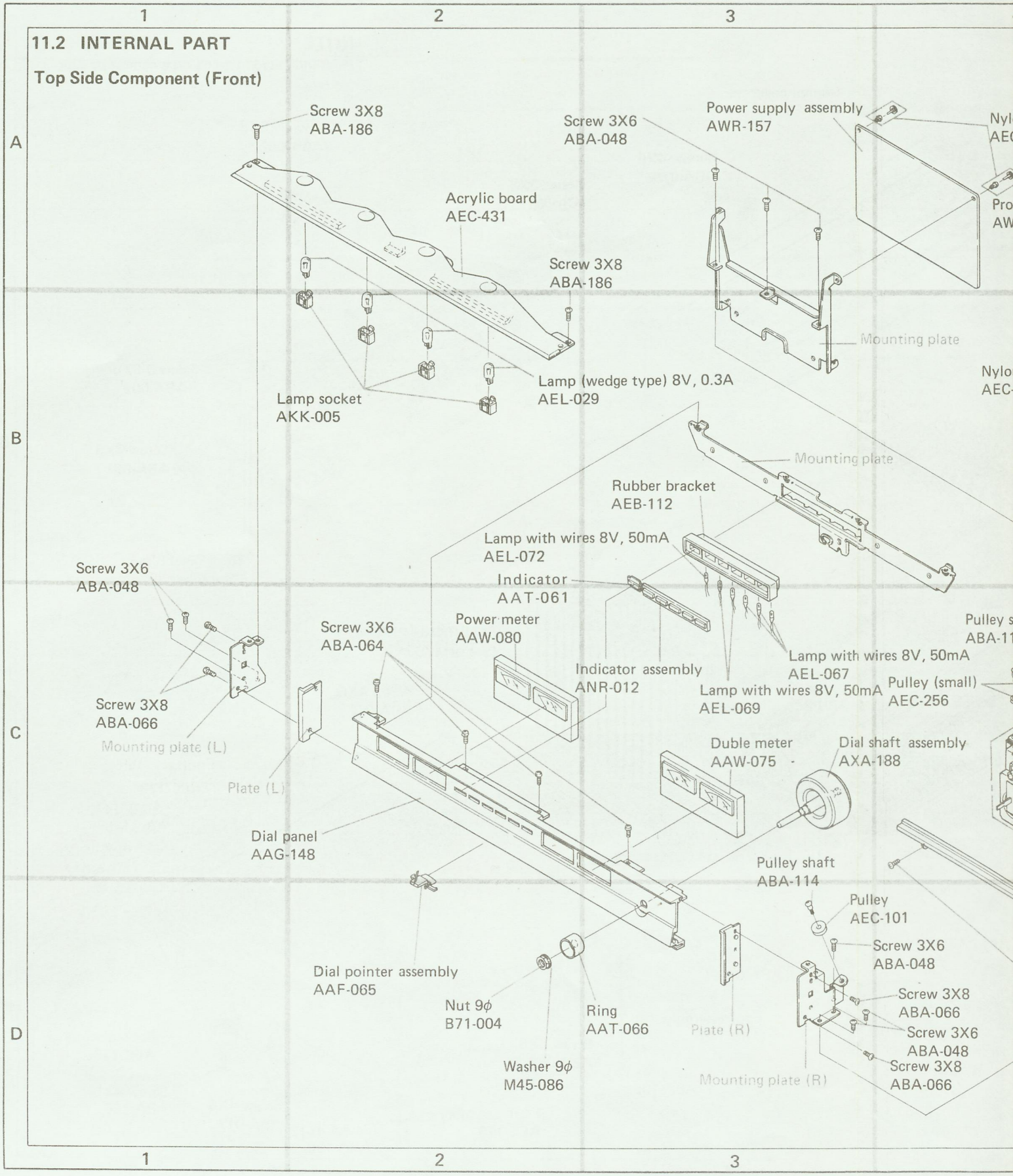

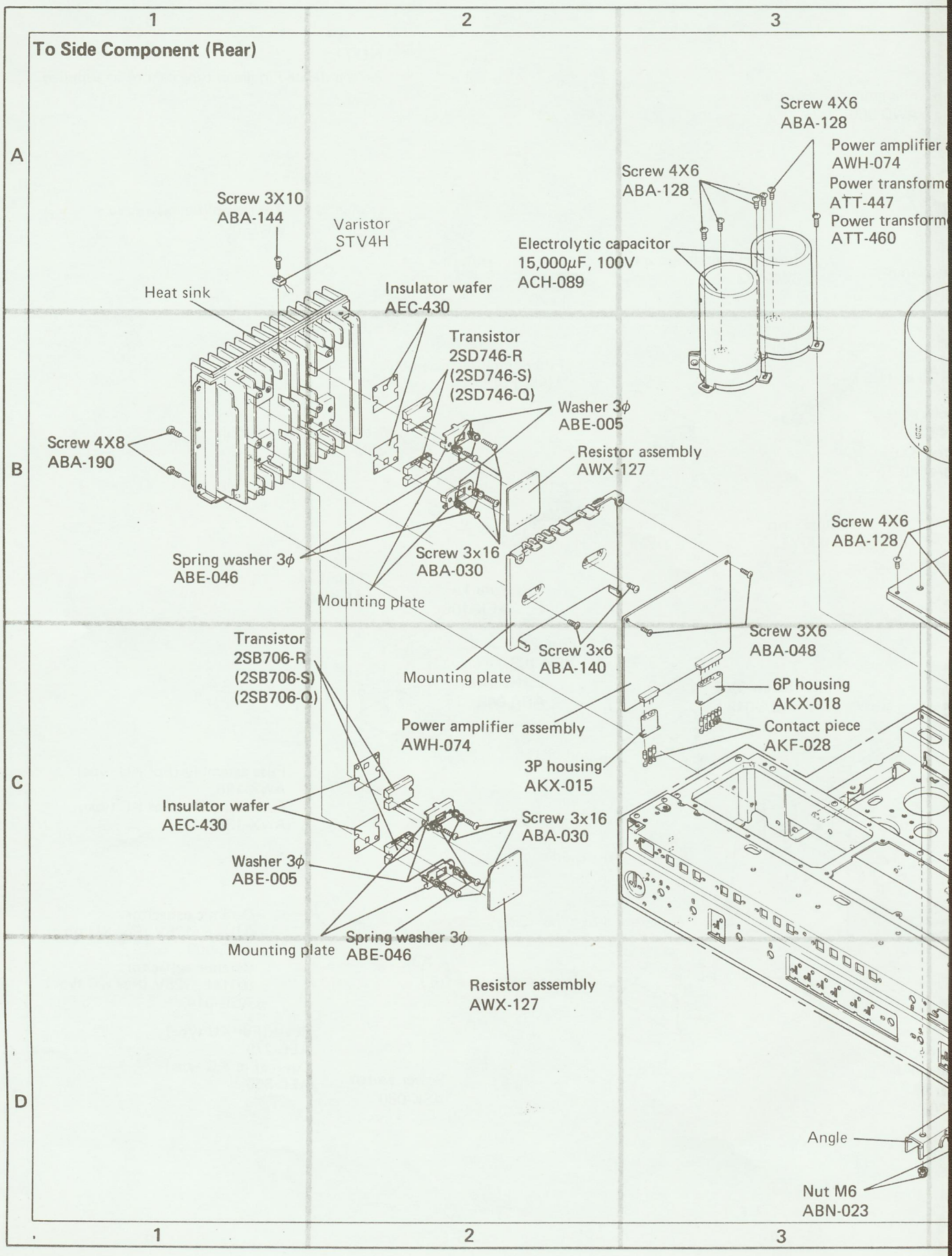
1
2
3
A
B
C
D
To Side Component (Rear)
Screw 4X6
ABA-128
Power amplifier
AWH-074
Power transforme
ATT-447
Power transform
ATT-460
Screw 4X6
ABA-128
Electrolytic capacitor
15,000μF, 100V
ACH-089
Screw 3X10
ABA-144
Varistor
STV4H
Heat sink
Insulator wafer
AEC-430
Transistor
2SD746-R
(2SD746-S)
(2SD746-Q)
Washer 3φ
ABE-005
Screw 4X8
ABA-190
Resistor assembly
AWX-127
Screw 4X6
ABA-128
Spring washer 3φ
ABE-046
Screw 3x16
ABA-030
Mounting plate
Transistor
2SB706-R
(2SB706-S)
(2SB706-Q)
Screw 3x6
ABA-140
Mounting plate
Screw 3X6
ABA-048
6P housing
AKX-018
Power amplifier assembly
AWH-074
Contact piece
AKF-028
3P housing
AKX-015
Insulator wafer
AEC-430
Screw 3x16
ABA-030
Washer 3φ
ABE-005
Mounting plate
Spring washer 3φ
ABE-046
Resistor assembly
AWX-127
Angle
Nut M6
ABN-023

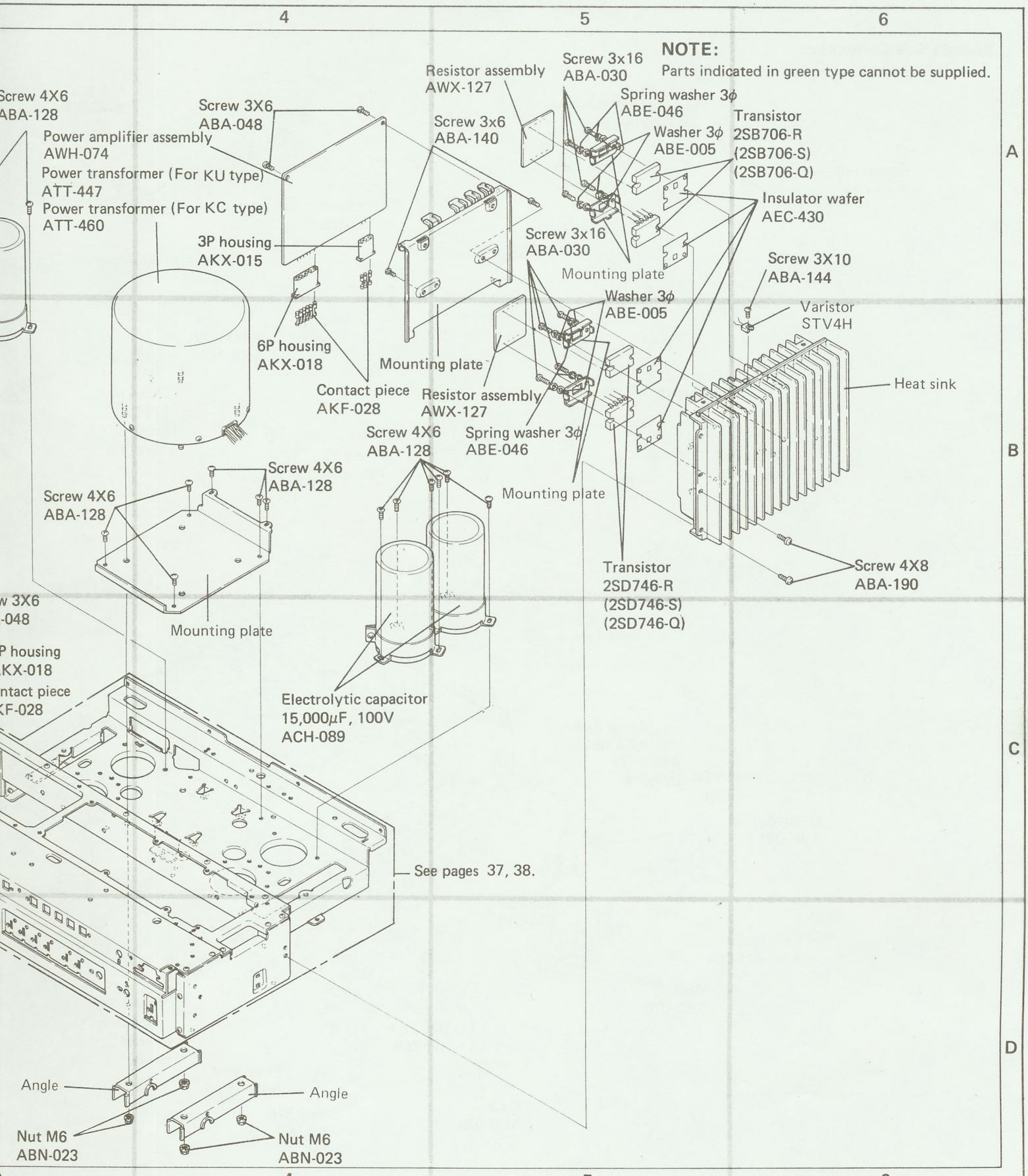
4
5
6
A
B
C
D
NOTE:
Parts indicated in green type cannot be supplied.
Screw 4X6
ABA-128
Power amplifier assembly
AWH-074
Power transformer (For KU type)
ATT-447
Power transformer (For KC type)
ATT-460
Screw 3X6
ABA-048
3P housing
AKX-015
6P housing
AKX-018
Contact piece
AKF-028
Resistor assembly
AWX-127
Screw 3x6
ABA-140
Mounting plate
Screw 3x16
ABA-030
Spring washer 3φ
ABE-046
Washer 3φ
ABE-005
Transistor
2SB706-R
(2SB706-S)
(2SB706-Q)
Insulator wafer
AEC-430
Screw 3X10
ABA-144
Varistor
STV4H
Heat sink
Screw 4X8
ABA-190
Transistor
2SD746-R
(2SD746-S)
(2SD746-Q)
Screw 4X6
ABA-128
Mounting plate
Electrolytic capacitor
15,000μF, 100V
ACH-089
See pages 37, 38.
Angle
Nut M6
ABN-023

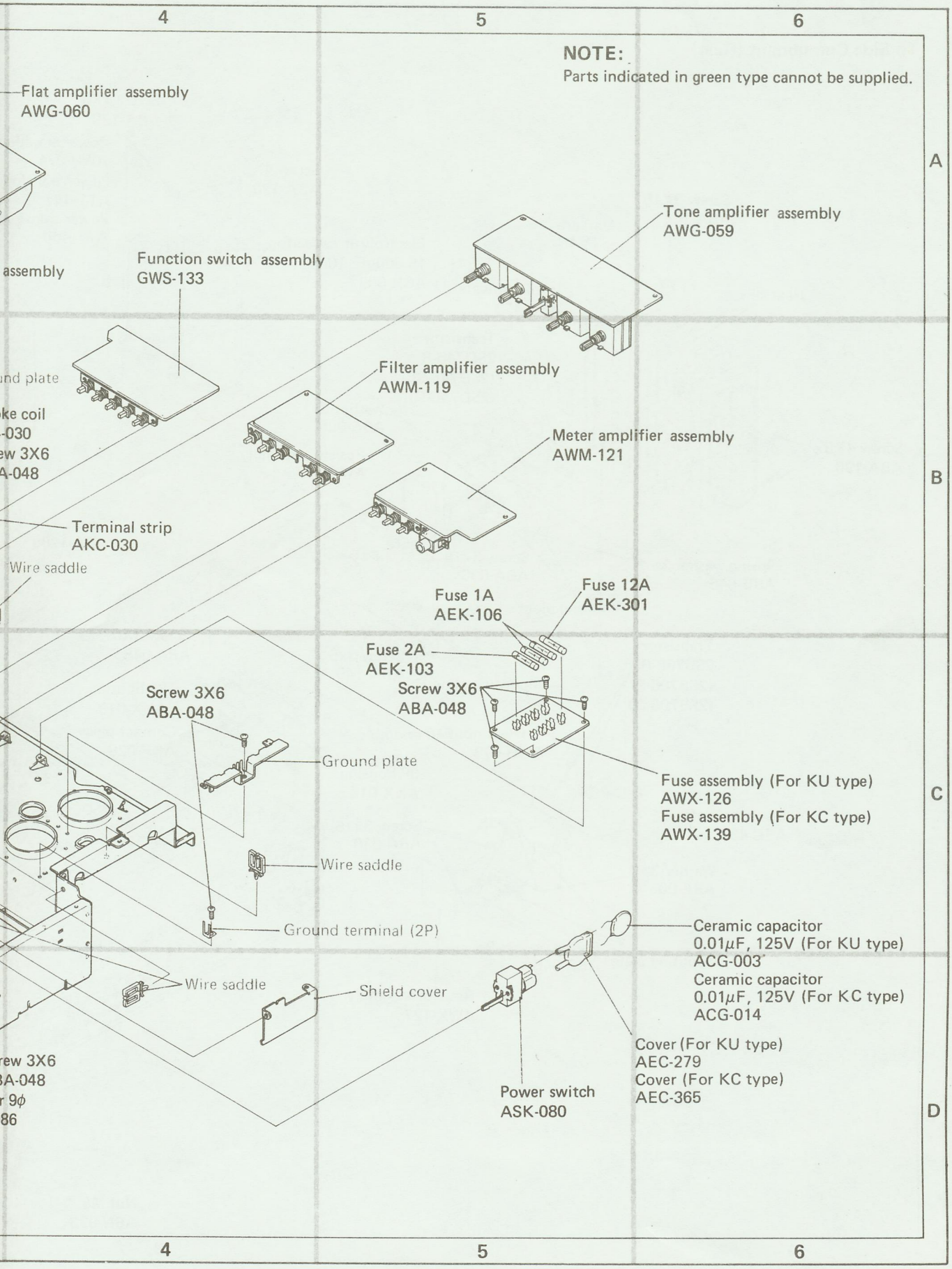
4
5
6
NOTE:
Parts indicated in green type cannot be supplied.
Flat amplifier assembly
AWG-060
A
Tone amplifier assembly
AWG-059
assembly
Function switch assembly
GWS-133
nd plate
Filter amplifier assembly
AWM-119
ke coil
-030
ew 3X6
A-048
Meter amplifier assembly
AWM-121
B
Terminal strip
AKC-030
Wire saddle
Fuse 1A
AEK-106
Fuse 12A
AEK-301
Fuse 2A
AEK-103
Screw 3X6
ABA-048
Screw 3X6
ABA-048
Ground plate
Fuse assembly (For KU type)
AWX-126
Fuse assembly (For KC type)
AWX-139
C
Wire saddle
Ground terminal (2P)
Ceramic capacitor
0.01μF, 125V (For KU type)
ACG-003
Ceramic capacitor
0.01μF, 125V (For KC type)
ACG-014
Wire saddle
Shield cover
Cover (For KU type)
AEC-279
Cover (For KC type)
AEC-365
rew 3X6
BA-048
r 9φ
86
Power switch
ASK-080
D
4
5
6

Bottom Side Component

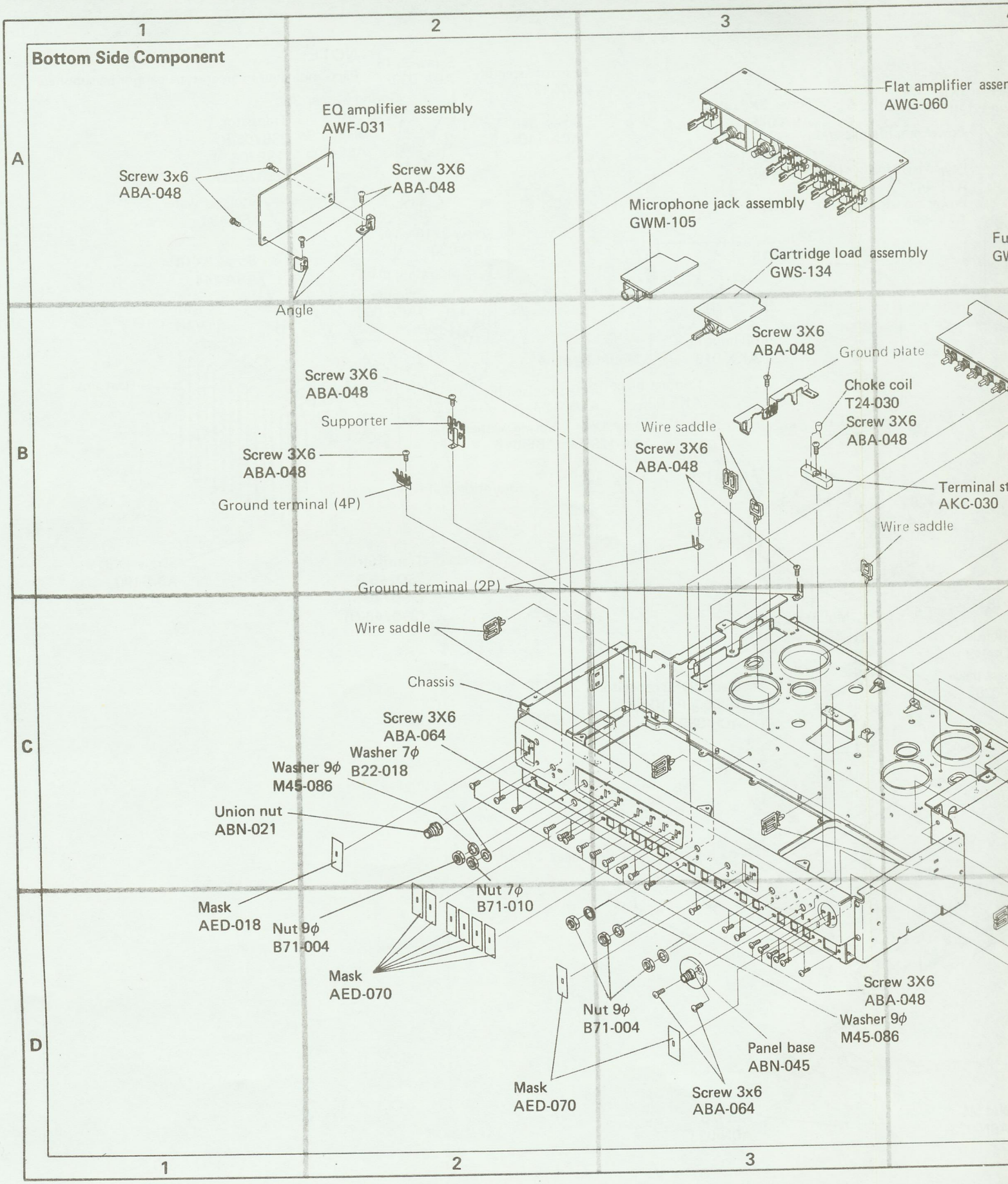

Rear Panel Component

NOTE:
Parts indicated in green type cannot be supplied.

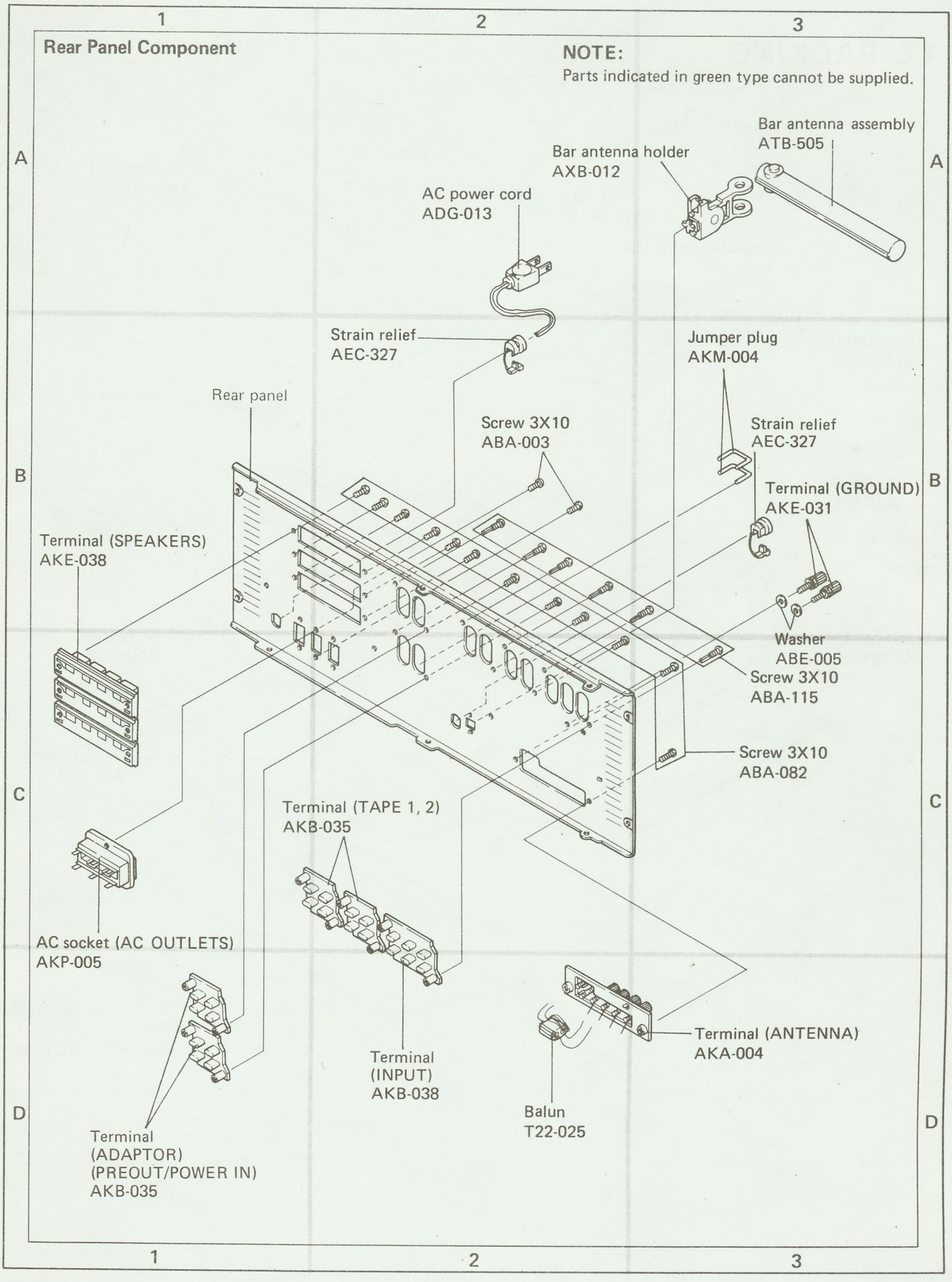

12. PACKING

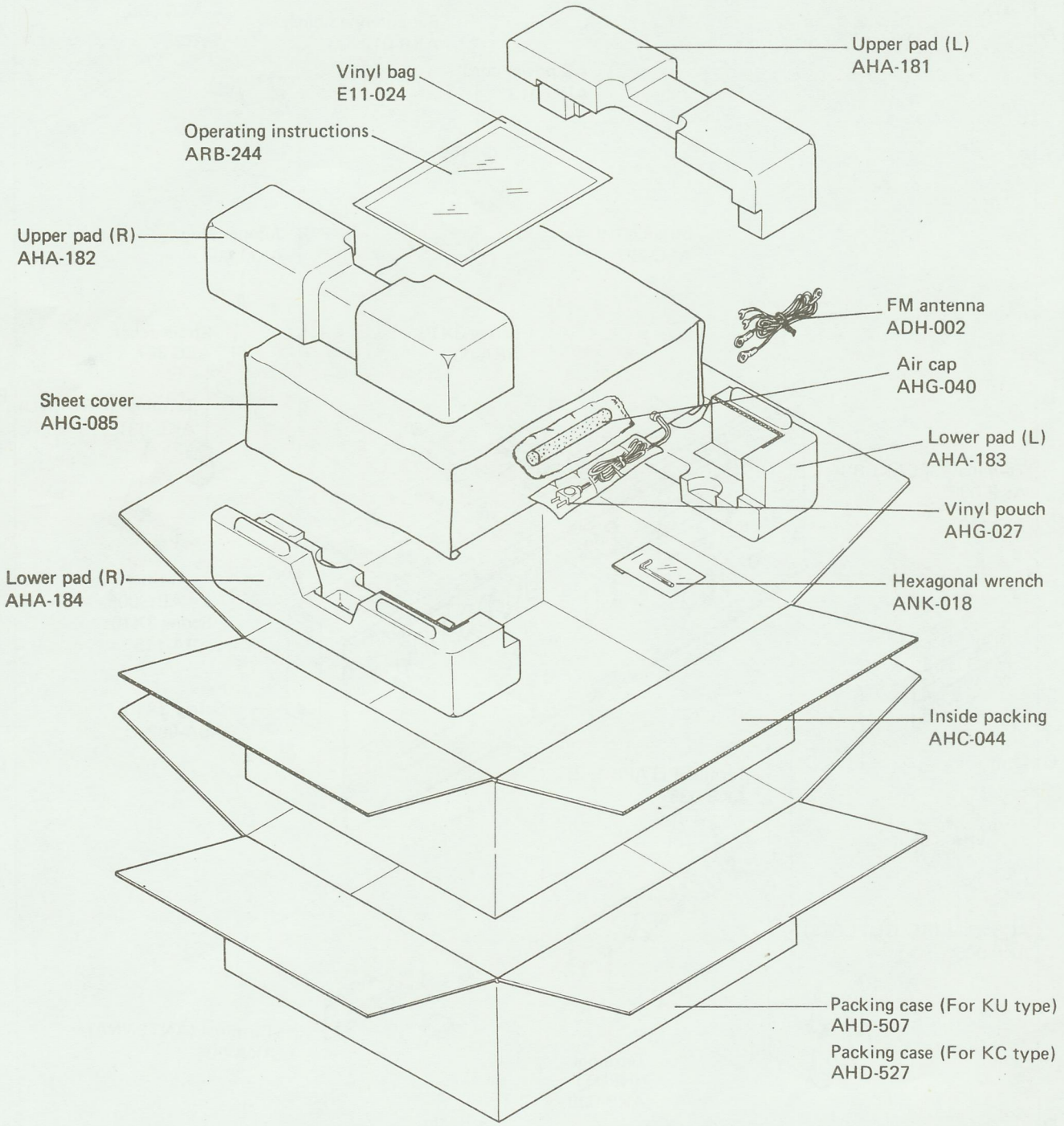
Upper pad (L)
AHA-181
Vinyl bag
E11-024
Operating instructions
ARB-244
Upper pad (R)
AHA-182
FM antenna
ADH-002
Air cap
AHG-040
Sheet cover
AHG-085
Lower pad (L)
AHA-183
Vinyl pouch
AHG-027
Lower pad (R)
AHA-184
Hexagonal wrench
ANK-018
Inside packing
AHC-044
Packing case (For KU type)
AHD-507
Packing case (For KC type)
AHD-527

13. SCHEMATIC DIAGRAMS, P.C. BOARD PATTERNS AND PARTS LIST

13.1 SCHEMATIC DIAGRAM AND MISCELLANEOUS PARTS

Miscellaneaus Parts

NOTE:
- *Capacitors: in μF unless otherwise noted p:pF*
- *Resistors: in Ω, ¼W unless otherwise noted k:kΩ, M:MΩ*

TRANSFORMERS AND COILS

Symbol	Part No.	Description
T1	ATT-447	Power transformer (For KU type)
	ATT-460	Power transformer (For KC type)
T2	ATB-505	Bar antenna assembly
T3	T22-025	Balun
L1	T24-030	Choke coil

CAPACITORS

Symbol	Part No.	Description		
C1	ACH-089	Electrolytic	15000	100V
C2	ACH-089	Electrolytic	15000	100V
C3	ACH-089	Electrolytic	15000	100V
C4	ACH-089	Electrolytic	15000	100V
C5	ACG-003	Ceramic (For KU type)	0.01	125V
	ACG-014	Ceramic (For KC type)	0.01	125V
C6	CKDYF 403Z 50	Ceramic	0.04	50V
C7	CKDYF 403Z 50	Ceramic	0.04	50V
C8	CKDYF 403Z 50	Ceramic	0.04	50V
C9	CKDYF 403Z 50	Ceramic	0.04	50V
C10	CKDYF 403Z 50	Ceramic	0.04	50V
C11	CKDYF 403Z 50	Ceramic	0.04	50V
C12	CKDYF 403Z 50	Ceramic	0.04	50V
C13	CKDYF 403Z 50	Ceramic	0.04	50V

OTHERS

Symbol	Part No.	Description		
S25	ASK-080	Power switch		
	AKK-005	Lamp socket		
R1	RD¼PS 225J	Carbon film resistor	2.2M	¼W

SEMICONDUCTORS

Symbol	Part No.	Description
Q1	2SD746-R, S or Q	Transistor
Q2	2SD746-R, S or Q	Transistor
Q3	2SD746-R, S or Q	Transistor
Q4	2SD746-R, S or Q	Transistor
Q5	2SB706-R, S or Q	Transistor
Q6	2SB706-R, S or Q	Transistor
Q7	2SB706-R, S or Q	Transistor
Q8	2SB706-R, S or Q	Transistor

* hfe of these transistors (Q1 ~ Q8) should have the same value.

P.C. BOARD ASSEMBLIES

Symbol	Part No.	Description
	AWE-092	Tuner assembly
	AWF-031	EQ amplifier assembly
	GWS-133	Function switch assembly
	GWS-134	Cartridge load assembly
	GWM-105	Microphone jack assembly
	AWG-060	Flat amplifier assembly
	AWG-059	Tone amplifier assembly
	AWM-119	Filter amplifier assembly
	AWH-074	Power amplifier assembly
	AWM-121	Meter amplifier assembly
	AWM-123	Protection assembly
	AWR-157	Power supply assembly
	AWX-126	Fuse assembly (For KU type)
	AWX-139	Fuse assembly (For KC type)
	AWX-127	Resistor assembly

LAMPS AND FUSES

Symbol	Part No.	Description		
PL1	AEL-029	Lamp (wedge type)	8V	0.3A
PL2	AEL-029	Lamp (wedge type)	8V	0.3A
PL3	AEL-029	Lamp (wedge type)	8V	0.3A
PL4	AEL-029	Lamp (wedge type)	8V	0.3A
PL5	AEL-069	Lamp with wires	8V	50mA
PL6	AEL-069	Lamp with wires	8V	50mA
PL7	AEL-067	Lamp with wires	8V	50mA
PL8	AEL-067	Lamp with wires	8V	50mA
PL9	AEL-067	Lamp with wires	8V	50mA
PL10	AEL-072	Lamp with wires	8V	50mA
FU1	AEK-301	Fuse		12A
FU2	AEK-103	Fuse		2A
FU3	AEK-106	Fuse		1A
FU4	AEK-106	Fuse		1A

External Appearance of Transistors and ICs

2SC1400
2SC1906
2SA733
2SC945A
2SC1775
2SC1438

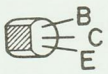

2SA906
2SC1914
2SA904A
2SC869
2SA726
2SC1312
2SC1313
2SC1919

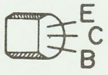

2SC1885
2SA912

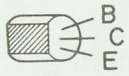

2SA899A
2SA899
2SC1904A
2SC1904

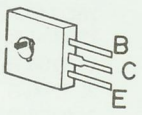

2SB628A
2SD608A

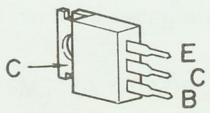

2SC1344

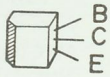

3SK45

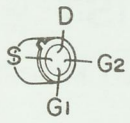

2SK55

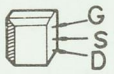

PA3001-A
HA1197
PA1002-A
PA1001-A

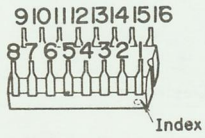

2SD746
2SB706

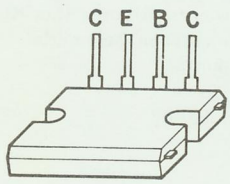

TA7302
TA7302P

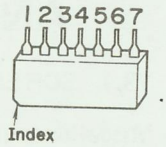

2SD712
2SB682

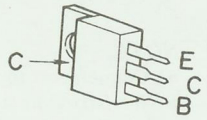

2SA979

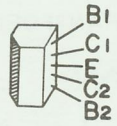

2SC2291

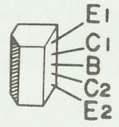

2SK117

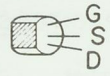

Circuit Diagrams of ICs

HA1197

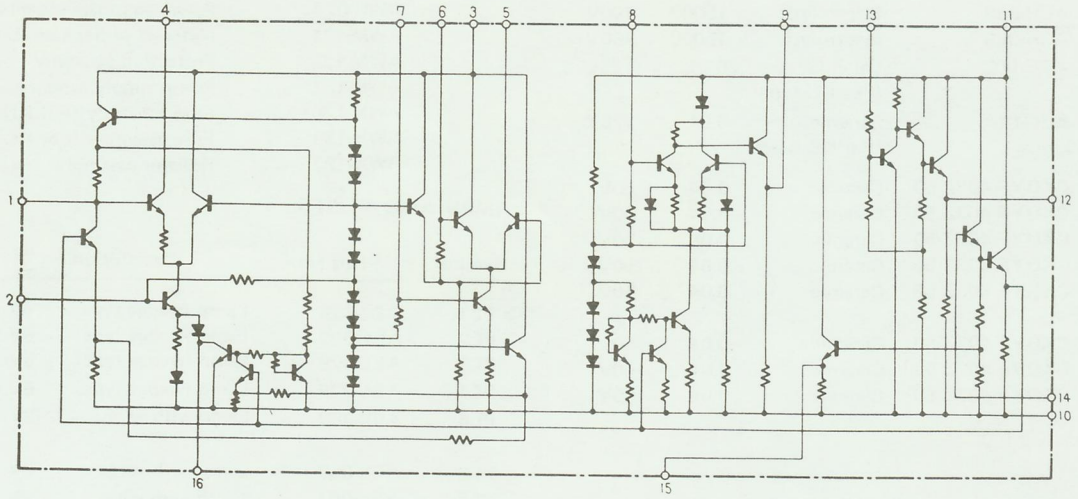

TA7302P

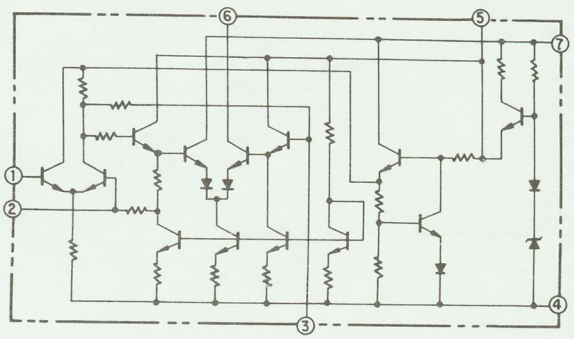

Schematic Diagram

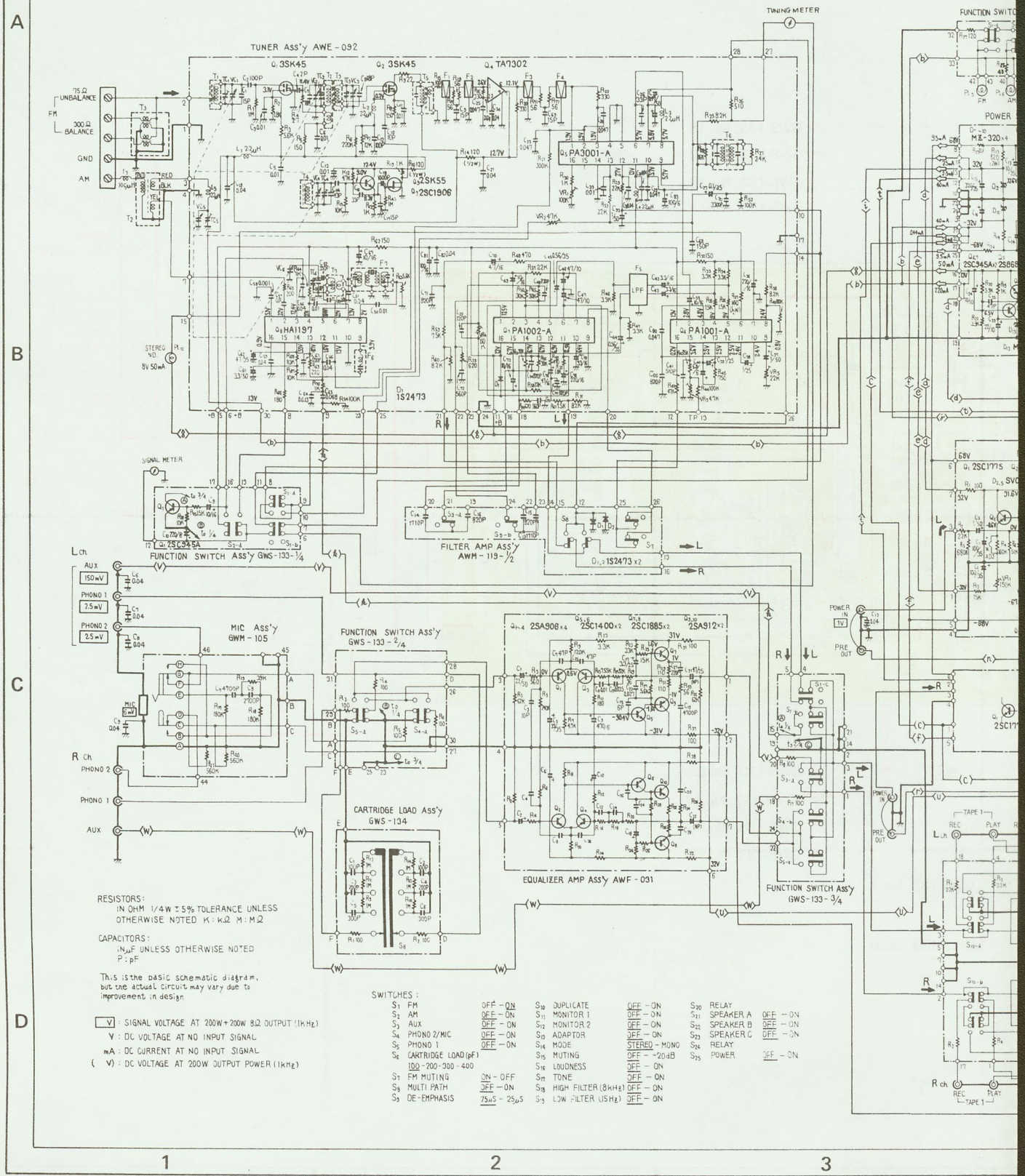

NOTE:
The indicated semiconductors are representative ones only. Other alternative semiconductors may be used and are listed in the parts list.

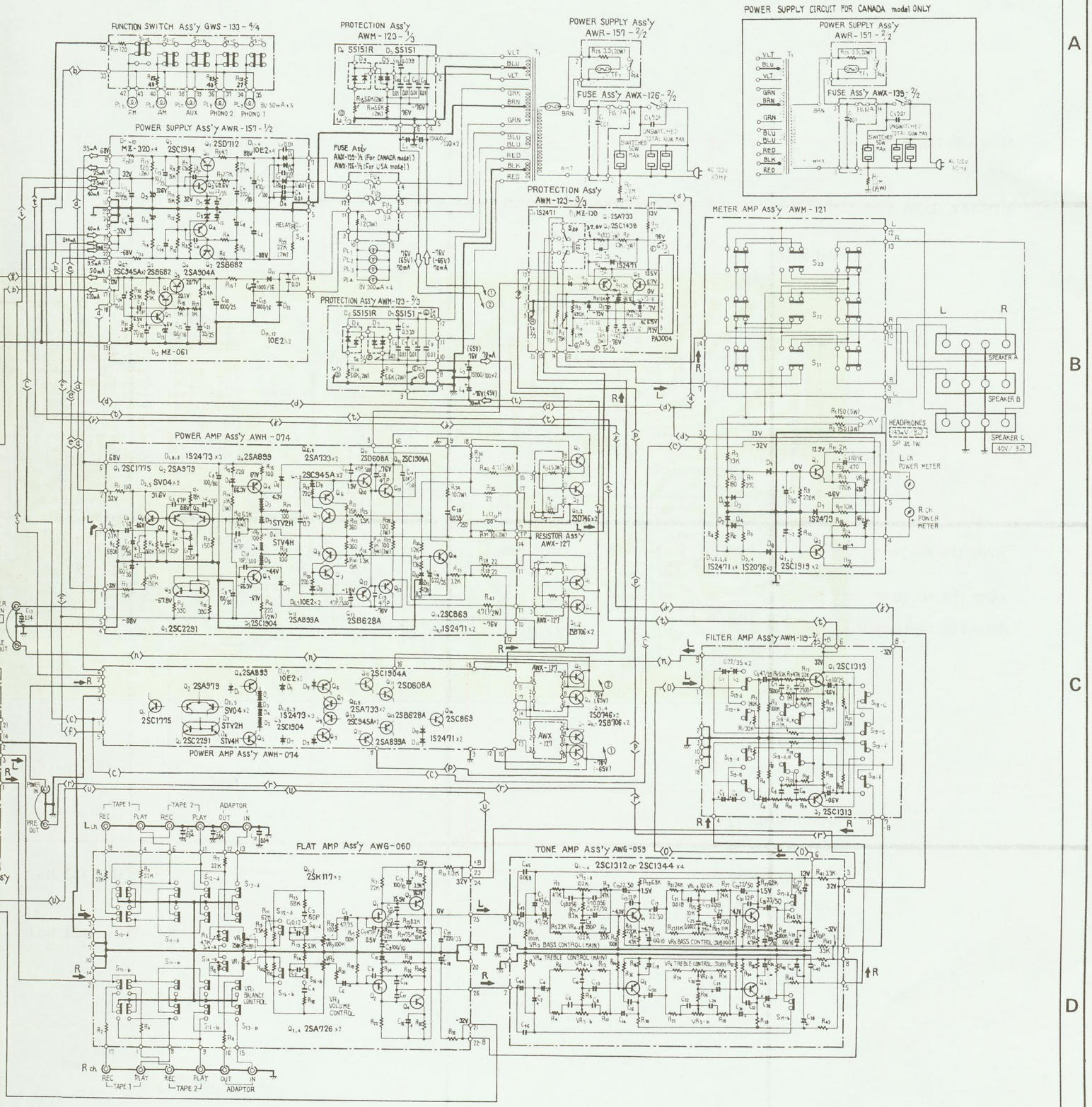

GWS-133, No.15

GWS-133, No.13

GWS-133, No.16

GWS-133, No.17

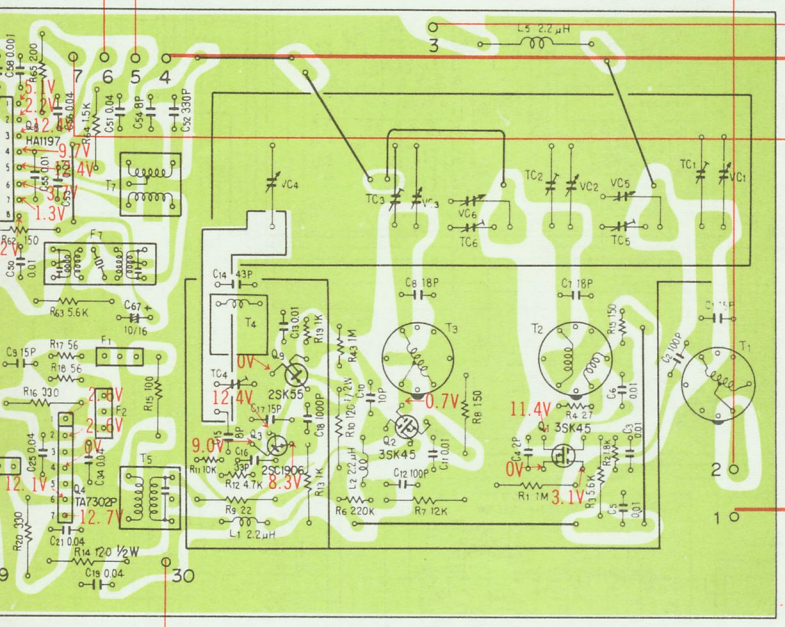

GWS-133, No.9

AWR-157, No.17

GWS-133, No.33

GWS-133, No.10

GWS-133, No.7

GWS-133, No.6

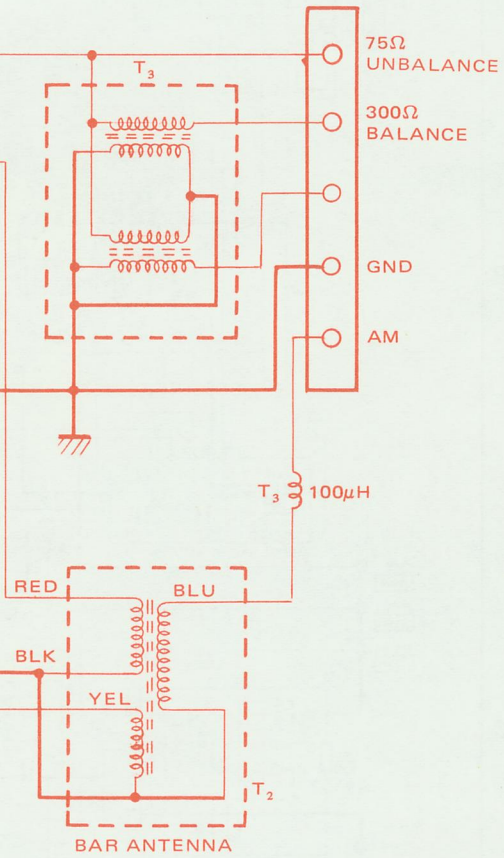

13.2 TUNER ASSEMBLY (AWE-092)

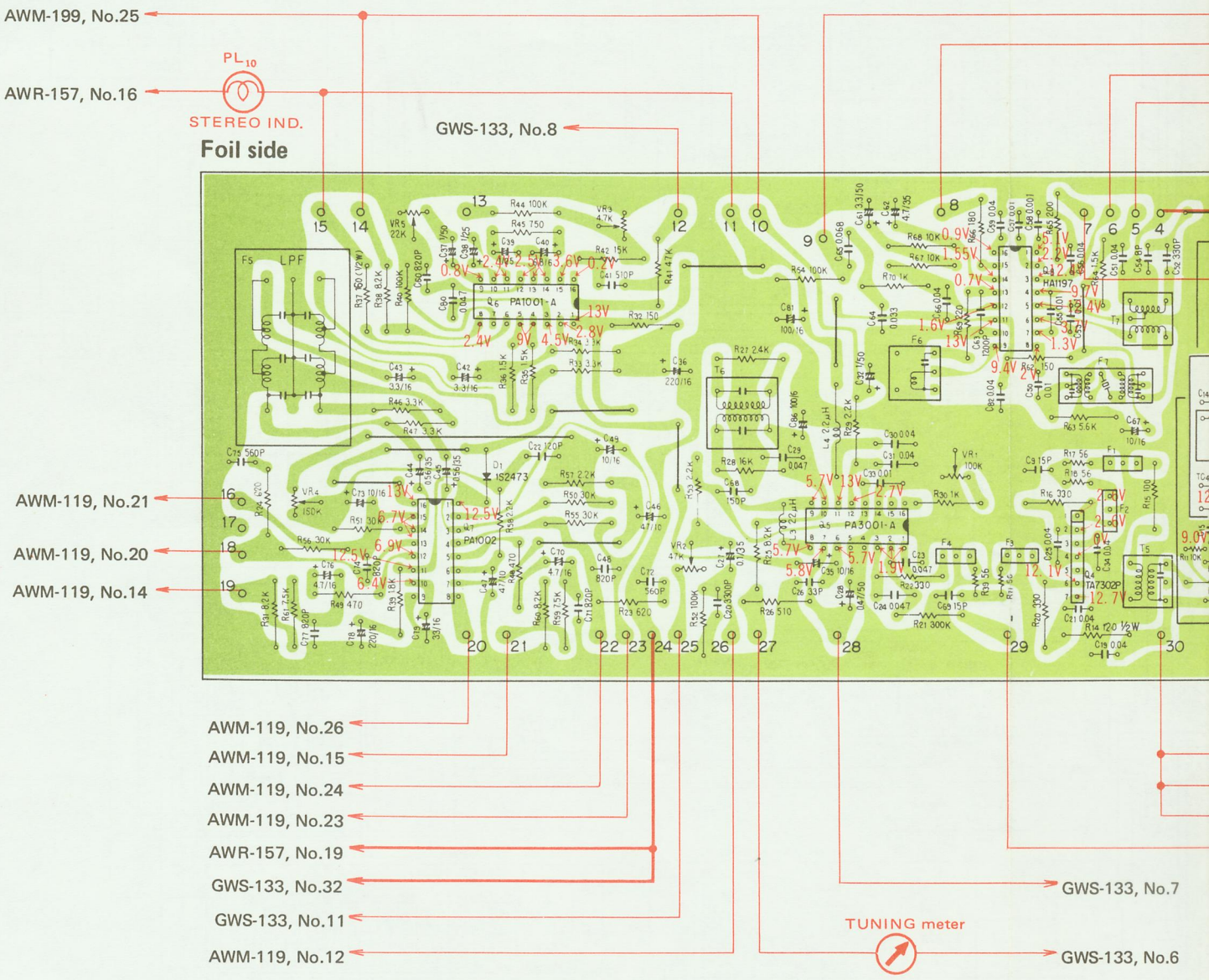

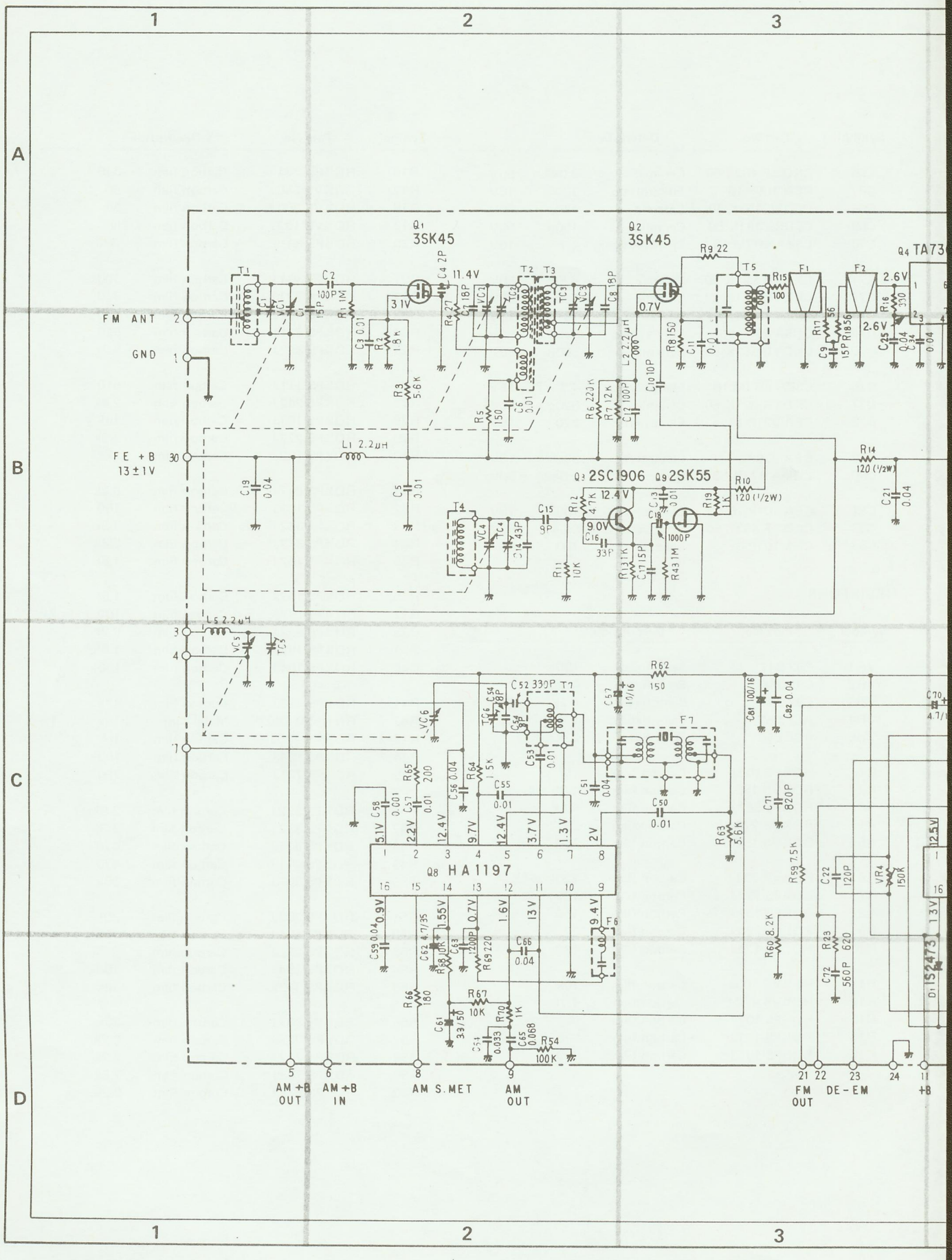
1
2
3
A
B
C
D
Q1 3SK45
Q2 3SK45
Q4 TA73
FM ANT 2
GND 1
FE +B 13±1V 30
L1 2.2μH
L5 2.2μH
Q3 2SC1906
Q9 2SK55
Q8 HA1197
11.4V
3.1V
0.7V
2.6V
12.4V
9.0V
5.1V
2.2V
9.7V
3.7V
1.3V
2V
0.9V
1.55V
1.6V
13V
9.4V
12.5V
AM +B OUT
AM +B IN
AM S.MET
AM OUT
FM OUT
DE-EM
+B

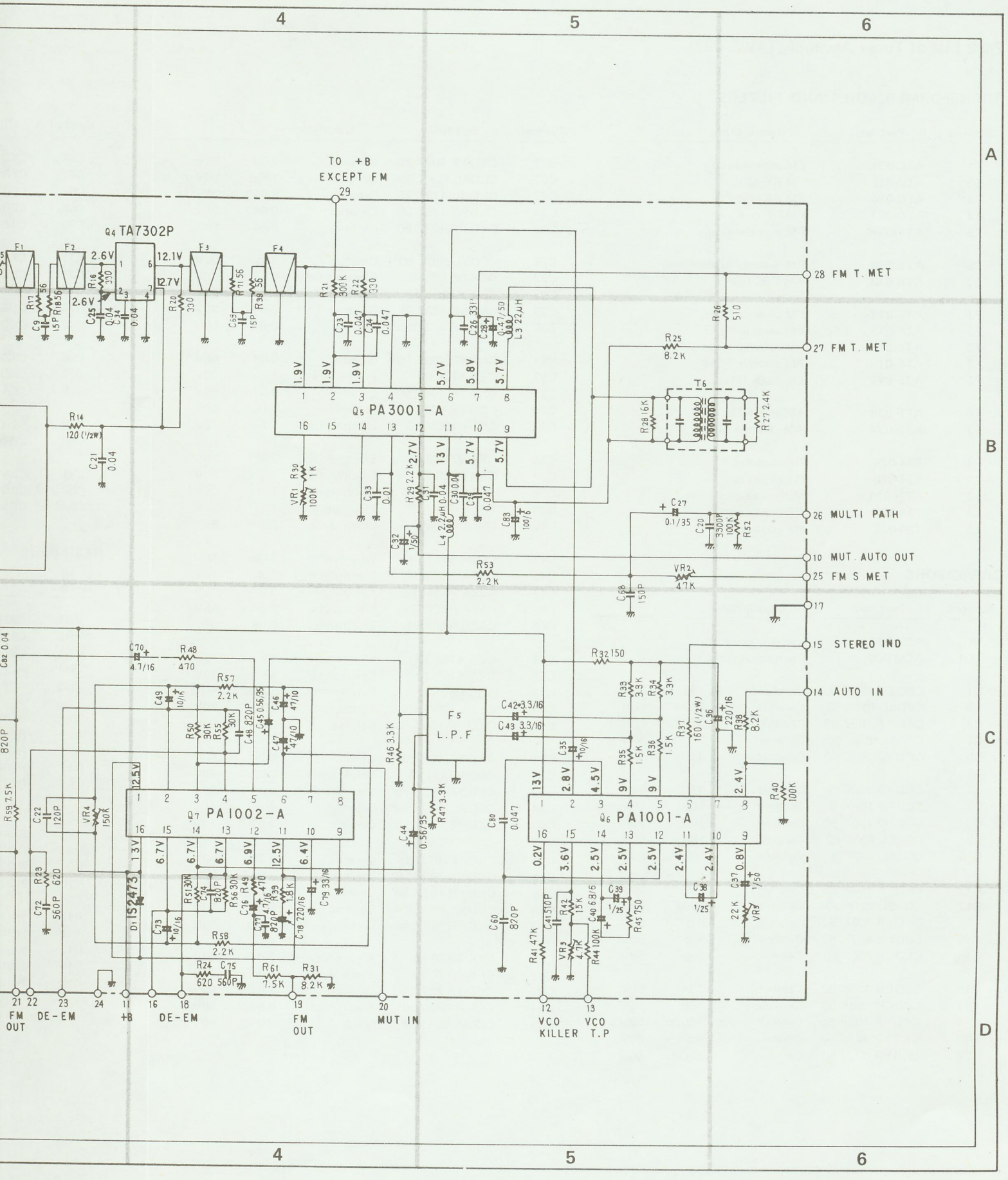
4
5
6
A
B
C
D
TO +B
EXCEPT FM
29
Q4 TA7302P
F1
F2
F3
F4
2.6V
12.1V
12.7V
2.6V
R16 330
R17 56
R18 56
C9 15P
C25 0.04
0.04
0.04
R20 330
C65 15P
R71 56
R39 56
R21 300K
R22 330
C23 0.047
C24 0.047
C26 331
C28 0.47/50
L3 22μH
1.9V
1.9V
1.9V
5.7V
5.8V
5.7V
Q5 PA3001-A
1 2 3 4 5 6 7 8
16 15 14 13 12 11 10 9
R14 120 (1/2W)
C21 0.04
VR1 100K
R30 1K
C33 0.01
R29 2.2K
C31 0.04
L4 2.2μH
C30 0.04
C34 0.047
C83 100/6
C32 1/50
2.7V
13 V
5.7V
5.7V
R53 2.2K
R25 8.2K
R26 510
T6
R28 16K
R27 2.4K
C27 0.1/35
C20 3300P
100K
R52
VR2 47K
C68 150P
28 FM T. MET
27 FM T. MET
26 MULTI PATH
10 MUT. AUTO OUT
25 FM S MET
17
15 STEREO IND
14 AUTO IN
R32 150
C70 4.7/16
R48 470
R57 2.2K
C49 10/16
C46 47/10
C45 0.56/35
C48 820P
C47 47/10
R50 30K
R55 30K
R46 3.3K
F5
L.P.F
C42 3.3/16
C43 3.3/16
R33 3.3K
R34 3.3K
R37 160 (1/2W)
C36 220/16
R38 8.2K
C35 10/16
R35 1.5K
R36 1.5K
C44 0.56/35
R47 3.3K
C80 0.047
Q7 PA1002-A
Q6 PA1001-A
12.5V
13V
6.7V
6.7V
6.7V
6.9V
12.5V
6.4V
13V
2.8V
4.5V
9V
9V
2.4V
0.2V
3.6V
2.5V
2.5V
2.5V
2.4V
2.4V
0.8V
R40 100K
R59 7.5K
C22 120P
VR4 150K
R23 620
C72 560P
D1 1S2473
C73 10/16
R51 30K
C74 820P
R56 30K
R49 470
C76 47/16
R39 1.8K
C77 820P
C78 220/16
C79 33/16
R58 2.2K
R24 620
C75 560P
R61 7.5K
R31 8.2K
C60 870P
R41 47K
C41 510P
R42 15K
VR3 4.7K
R44 100K
C40 6.8/6
C39 1/25
R45 750
C38 1/25
C37 1/50
22K
VR5
21 FM OUT
22 DE-EM
23
24
11 +B
16 DE-EM
18
19 FM OUT
20 MUT IN
12 VCO KILLER
13 VCO T.P

Parts List of Tuner Assembly (AWE-092)

TRANSFORMER, COILS AND FILTERS

Symbol	Part No.	Description
T1	ATC-021	FM antenna coil
T2	ATC-015	FM RF coil
T3	ATC-016	FM RF coil
T4	ATC-057	FM RF coil
T5	ATE-039	FM matching coil
T6	ATE-030	FM detector transformer
T7	ATB-013	AM OSC coil
F1	ATF-018	FM ceramic filter
F2	ATF-018	FM ceramic filter
F3	ATF-018	FM ceramic filter
F4	ATF-018	FM ceramic filter
F5	ATF-047	Low pass filter
F6	ATF-038	455kHz filter
F7	ATF-034	AM ceramic filter
L1	T24-028	RF choke coil
L2	T24-028	RF choke coil
L3	ATH-014	Micro inductor
L4	T24-028	RF choke coil
L5	T24-028	RF choke coil

CAPACITORS

Symbol	Part No.	Description		
VC	ACK-022	Variable capacitor		
TC4	ACM-006	Ceramic trimmer		
C1	CCDTH 150K 50	Ceramic	15p	50V
C2	CCDSL 101K 50	Ceramic	100p	50V
C3	CKDYF 103Z 50	Ceramic	0.01	50V
C4	CCDSL 020C 50	Ceramic	2p	50V
C5	CKDYF 103Z 50	Ceramic	0.01	50V
C6	CKDYF 103Z 50	Ceramic	0.01	50V
C7	CCDTH 180K 50	Ceramic	18p	50V
C8	CCDTH 180K 50	Ceramic	18p	50V
C9	CCDSL 150K 50	Ceramic	15p	50V
C10	CCDSL 100F 50	Ceramic	10p	50V
C11	CKDYB 103K 50	Ceramic	0.01	50V
C12	CCDSL 101K 50	Ceramic	100p	50V
C13	CKDYB 103K 50	Ceramic	0.01	50V
C14	CCDLH 430K 50	Ceramic	43p	50V
C15	CCDCH 080F 50	Ceramic	8p	50V
C16	CCDCH 330K 50	Ceramic	33p	50V
C17	CCDCH 150K 50	Ceramic	15p	50V
C18	CKDYB 102K 50	Ceramic	1000p	50V
C19	CKDYF 403Z 50	Ceramic	0.04	50V
C20	CKDYA 332J 50	Ceramic	3300p	50V
C21	CKDYF 403Z 50	Ceramic	0.04	50V
C22	CCDSL 121K 50	Ceramic	120p	50V
C23	CKDBC 473Z 25	Ceramic	0.047	25V
C24	CKDBC 473Z 25	Ceramic	0.047	25V
C25	CKDYF 403Z 50	Ceramic	0.04	50V
C26	CCDSL 330K 50	Ceramic	33p	50V
C27	CZA 0R1M 35	Electrolytic	0.1	35V
C28	CEA R47P 50	Electrolytic	0.47	50V
C29	CKDBC 473Z 25	Ceramic	0.047	25V
C30	CKDYF 403Z 50	Ceramic	0.04	50V
C31	CKDYF 403Z 50	Ceramic	0.04	50V
C32	CEA 010P 50	Electrolytic	1	50V
C33	CKDYF 103Z 50	Ceramic	0.01	50V
C34	CKDYF 403Z 50	Ceramic	0.04	50V
C35	CSZA 100M 16	Electrolytic	10	16V
C36	CEA 221P 16	Electrolytic	220	16V
C37	CEA 010P 50	Electrolytic	1	50V
C38	CSZA 010M 25	Electrolytic	1	25V
C39	CSZA 010M 25	Electrolytic	1	25V
C40	CSZA 6R8M 6	Electrolytic	6.8	6V
C41	CQSH 511J 50	Polystyrene	510p	50V
C42	CSZA 3R3M 16	Electrolytic	3.3	16V
C43	CSZA 3R3M 16	Electrolytic	3.3	16V
C44	CSZA R56K 35	Electrolytic	0.56	35V
C45	CSZA R56K 35	Electrolytic	0.56	35V
C46	CEA 470P 10	Electrolytic	47	10V
C47	CEA 470P 10	Electrolytic	47	10V
C48	CQSA 821G 50	Polystyrene	820p	50V
C49	CSZA 100M 16	Electrolytic	10	16V
C50	CKDYF 103Z 50	Ceramic	0.01	50V
C51	CKDYF 403Z 50	Ceramic	0.04	50V
C52	CQSA 331J 50	Polystyrene	330p	50V
C53	CKDYF 103Z 50	Ceramic	0.01	50V
C54	CCDSL 080F 50	Ceramic	8p	50V
C55	CKDYF 103Z 50	Ceramic	0.01	50V
C56	CKDYF 403Z 50	Ceramic	0.04	50V
C57	CKDYF 103Z 50	Ceramic	0.01	50V
C58	CKDYB 102K 50	Ceramic	1000p	50V
C59	CKDYF 403Z 50	Ceramic	0.04	50V
C60	CKDYB 821K 50	Ceramic	820p	50V
C61	CEA 3R3P 50	Electrolytic	3.3	50V
C62	CEA 4R7P 35	Electrolytic	4.7	35V
C63	CKDYB 122K 50	Ceramic	1200p	50V
C64	CQMA 333J 50	Mylar	0.033	50V
C65	CQMA 683J 50	Mylar	0.068	50V

Symbol	Part No.	Description		
C66	CKDYF 403Z 50	Ceramic	0.04	50V
C67	CEA 100P 16	Electrolytic	10	16V
C68	CCDSL 151K 50	Ceramic	150p	50V
C69	CCDSL 151K 50	Ceramic	150p	50V
C70	CSZA.4R7M 16	Electrolytic	4.7	16V
C71	CKDYB 821K 50	Ceramic	820p	50V
C72	CKDYB 561K 50	Ceramic	560p	50V
C73	CSZA 100M 16	Electrolytic	10	16V
C74	CQSA 821J 50	Polystyrene	820p	50V
C75	CKDYB 561K 50	Ceramic	560p	50V
C76	CSZA 4R7M 16	Electrolytic	4.7	16V
C77	CKDYB 821K 50	Ceramic	820p	50V
C78	CEA 221P 16	Electrolytic	220	16V
C79	CEA 330P 16	Electrolytic	33	16V
C80	CQMA 473K 50	Mylar	0.047	50V
C81	CEA 101P 16	Electrolytic	100	16V
C82	CKDYF 403Z 50	Ceramic	0.04	50V
C83	CEA 101P 6	Electrolytic	100	6V

RESISTORS

Symbol	Part No.	Description		
VR1	C92-047	Semi fixed	100k	
VR2	C92-048	Semi fixed	47k	
VR3	C92-051	Semi fixed	4.7k	
VR4	ACP-057	Semi fixed	150k	
VR5	ACP-056	Semi fixed	22k	
R1	RD¼PS 105J	Carbon film	1M	
R2	RD¼VS 182J	Carbon film	1.8k	
R3	RD¼PS 562J	Carbon film	5.6k	
R4	RD¼VS 270J	Carbon film	27	
R5	RD¼VS 151J	Carbon film	150	
R6	RD¼VS 224J	Carbon film	220k	
R7	RD¼PS 123J	Carbon film	12k	
R8	RD¼PS 151J	Carbon film	150	
R9	RD¼PS 220J	Carbon film	22	
R10	RD½PS 121J	Carbon film	120	½W
R11	RD¼VS 103J	Carbon film	10k	
R12	RD¼VS 472J	Carbon film	4.7k	
R13	RD¼PS 102J	Carbon film	1k	
R14	RD½PS 121J	Carbon film	120	½W
R15	RD¼PS 101J	Carbon film	100	
R16	RD¼PS 331J	Carbon film	330	
R17	RD¼VS 560J	Carbon film	56	
R18	RD¼VS 560J	Carbon film	56	
R19	RD¼VS 102J	Carbon film	1k	
R20	RD¼PS 331J	Carbon film	330	
R21	RD¼PS 304J	Carbon film	300k	
R22	RD¼PS 331J	Carbon film	330	
R23	RD¼PS 621J	Carbon film	620	
R24	RD¼PS 621J	Carbon film	620	
R25	RD¼PS 822J	Carbon film	8.2k	
R26	RD¼PS 511J	Carbon film	510	
R27	RD¼PS 242J	Carbon film	2.4k	
R28	RD¼PS 163J	Carbon film	16k	
R29	RD¼PS 222J	Carbon film	2.2k	
R30	RD¼PS 102J	Carbon film	1k	
R31	RD¼PS 822J	Carbon film	8.2k	
R32	RD¼PS 151J	Carbon film	150	
R33	RD¼PS 332J	Carbon film	3.3k	
R34	RD¼PS 332J	Carbon film	3.3k	
R35	RD¼PS 152J	Carbon film	1.5k	
R36	RD¼PS 152J	Carbon film	1.5k	
R37	RD½PS 161J	Carbon film	160	½W
R38	RD¼PS 822J	Carbon film	8.2k	
R39	RD¼PS 182J	Carbon film	1.8k	
R40	RD¼PS 104J	Carbon film	100k	
R41	RD¼PS 473J	Carbon film	47k	
R42	RN1/5SQ 1502F	Metal film	15k	1/5W
R43	RD¼VS 105J	Carbon film	1M	
R44	RD¼PS 104J	Carbon film	100k	
R45	RD¼PS 751J	Carbon film	750	
R46	RD¼PS 332J	Carbon film	3.3k	
R47	RD¼PS 332J	Carbon film	3.3k	
R48	RD¼PS 471J	Carbon film	470	
R49	RD¼PS 471J	Carbon film	470	
R50	RD¼PS 303J	Carbon film	30k	
R51	RD¼PS 303J	Carbon film	30k	
R52	RD¼PS 104J	Carbon film	100k	
R53	RD¼PS 222J	Carbon film	2.2k	
R54	RD¼PS 104J	Carbon film	100k	
R55	RD¼PS 303J	Carbon film	30k	
R56	RD¼PS 303J	Carbon film	30k	
R57	RD¼PS 222J	Carbon film	2.2k	
R58	RD¼PS 222J	Carbon film	2.2k	
R59	RD¼PS 752J	Carbon film	7.5k	
R60	RD¼PS 822J	Carbon film	8.2k	

Symbol	Part No.	Description	
R61	RD¼PS 752J	Carbon film	7.5k
R62	RD¼PS 151J	Carbon film	150
R63	RD¼PS 562J	Carbon film	5.6k
R64	RD¼PS 152J	Carbon film	1.5k
R65	RD¼PS 201J	Carbon film	200
R66	RD¼PS 181J	Carbon film	180
R67	RD¼PS 103J	Carbon film	10k
R68	RD¼PS 103J	Carbon film	10k
R69	RD¼PS 221J	Carbon film	220
R70	RD¼PS 102J	Carbon film	1k
R71	RD¼VS 560J	Carbon film	56
R72	RD¼VS 560J	Carbon film	56

SEMICONDUCTORS

Symbol	Part No.	Description
Q1	3SK45-B	FET
Q2	3SK45-B	FET
Q3	2SC1906	Transistor
Q4	TA 7302P	IC
Q5	PA3001-A	IC
Q6	PA1001-A	IC
Q7	PA1002-A	IC
Q8	HA1197	IC
Q9	2SK55-D	FET
D1	1S2473	Diode

List of changed parts information will be furnished whenever necessary and you are requested to amend parts number in this parts list.

List of Changed Parts for Factory Modification

Symbol	Part No.	Description

13.3 MICROPHONE JACK ASSEMBLY (GWM-105)

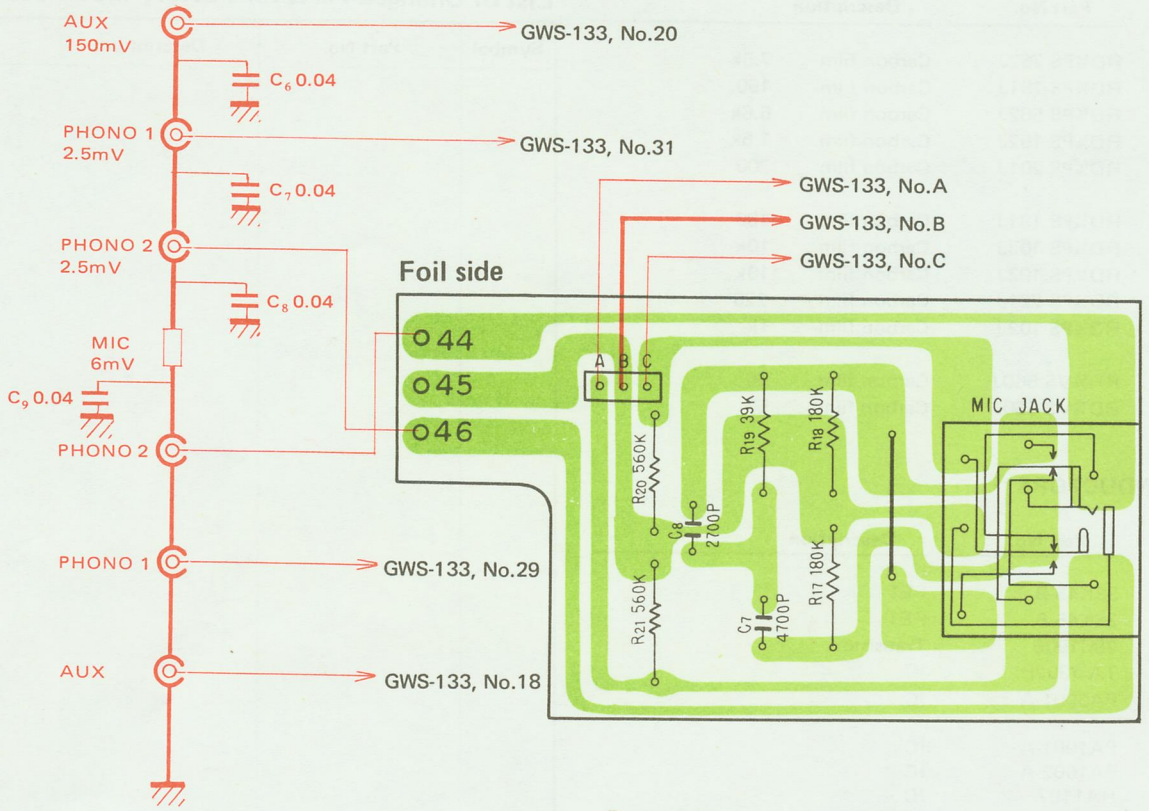

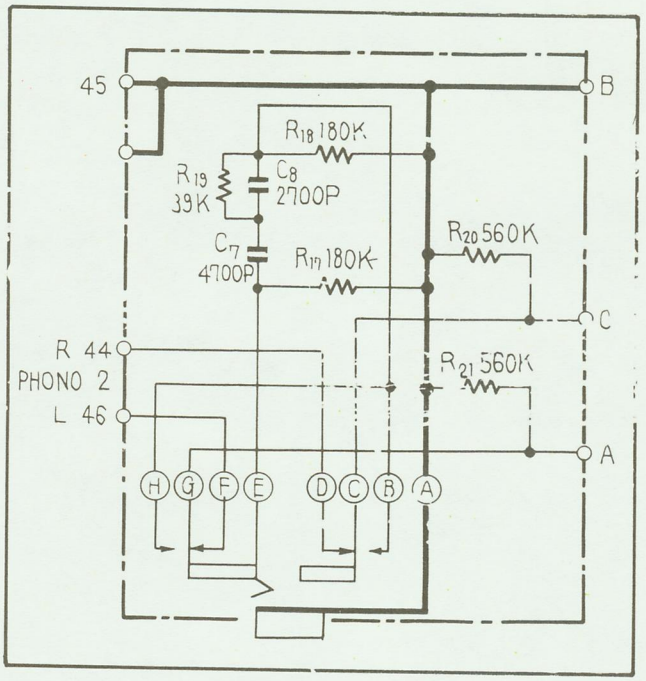

Parts List

CAPACITORS

Symbol	Part No.	Description		
C7	CKDYA 472J 50	Ceramic	4700p	50V
	(CQMA 472J 50)	(Mylar)	(4700p	50V)
C8	CKDYA 272J 50	Ceramic	2700p	50V
	(CQMA 272J 50)	(Mylar)	(2700p	50V)

RESISTORS

Symbol	Part No.	Description	
R17	RD¼PS 184J	Carbon film	180k
R18	RD¼PS 184J	Carbon film	180k
R19	RD¼PS 393J	Carbon film	39k
R20	RD¼PS 564J	Carbon film	560k
R21	RD¼PS 564J	Carbon film	560k

OTHER

Symbol	Part No.	Description
	AKN-012	Phone Jack (MIC)

13.4 CARTRIDGE LOAD ASSEMBLY (GWS-134)

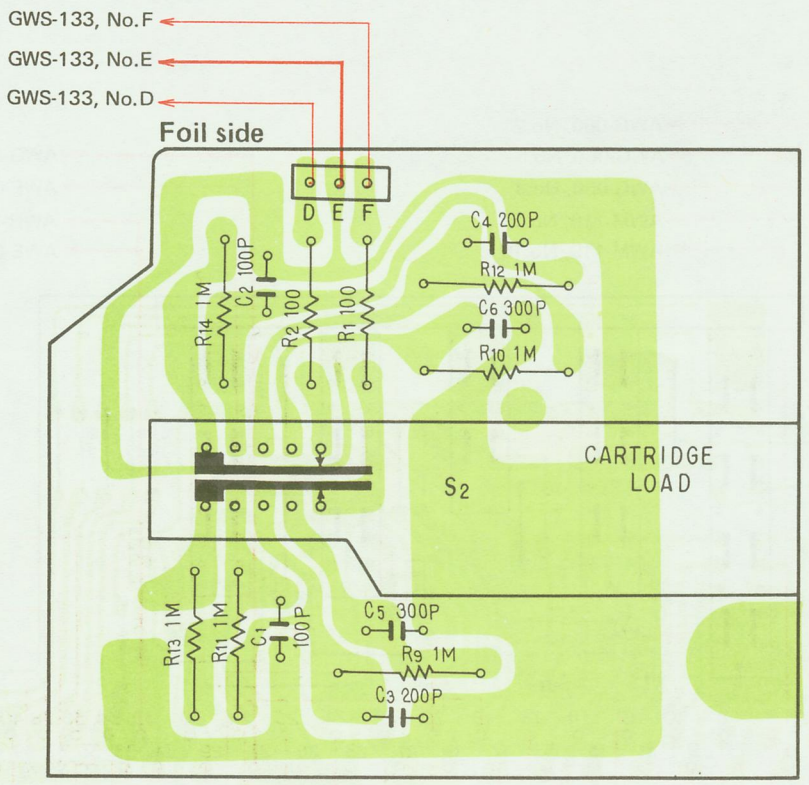

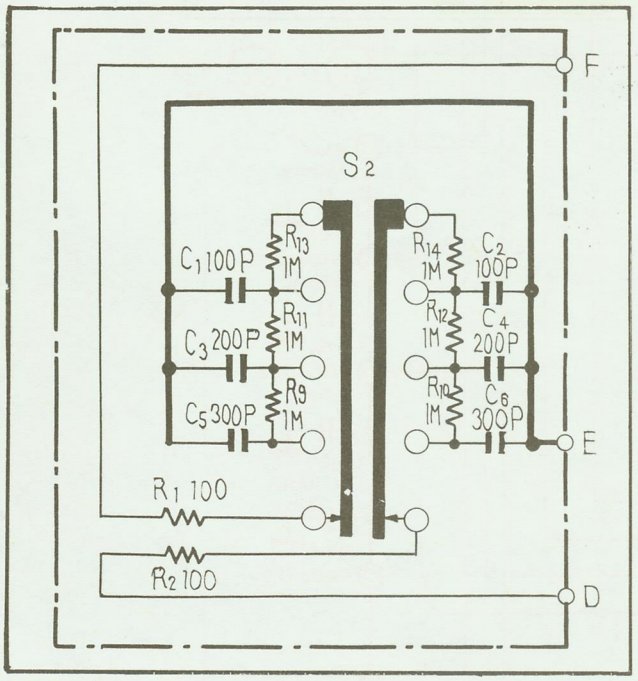

Parts List

SWITCH

Symbol	Part No.	Description
S2	ASE-001	Rotary switch (CARTRIDGE LOAD)

CAPACITORS

Symbol	Part No.	Description		
C1	CQSH 101J 50	Polystyrene	100p	50V
C2	CQSH 101J 50	Polystyrene	100p	50V
C3	CQSH 201J 50	Polystyrene	200p	50V
C4	CQSH 201J 50	Polystyrene	200p	50V
C5	CQSH 301J 50	Polystyrene	300p	50V
C6	CQSH 301J 50	Polystyrene	300p	50V

RESISTORS

Symbol	Part No.	Description	
R1	RD¼PS 101J	Carbon film	100
R2	RD¼PS 101J	Carbon film	100
R9	RD¼PS 105J	Carbon film	1M
R10	RD¼PS 105J	Carbon film	1M
R11	RD¼PS 105J	Carbon film	1M
R12	RD¼PS 105J	Carbon film	1M
R13	RD¼PS 105J	Carbon film	1M
R14	RD¼PS 105J	Carbon film	1M

13.5 FUNCTION SWITCH ASSEMBLY (GWS-133)

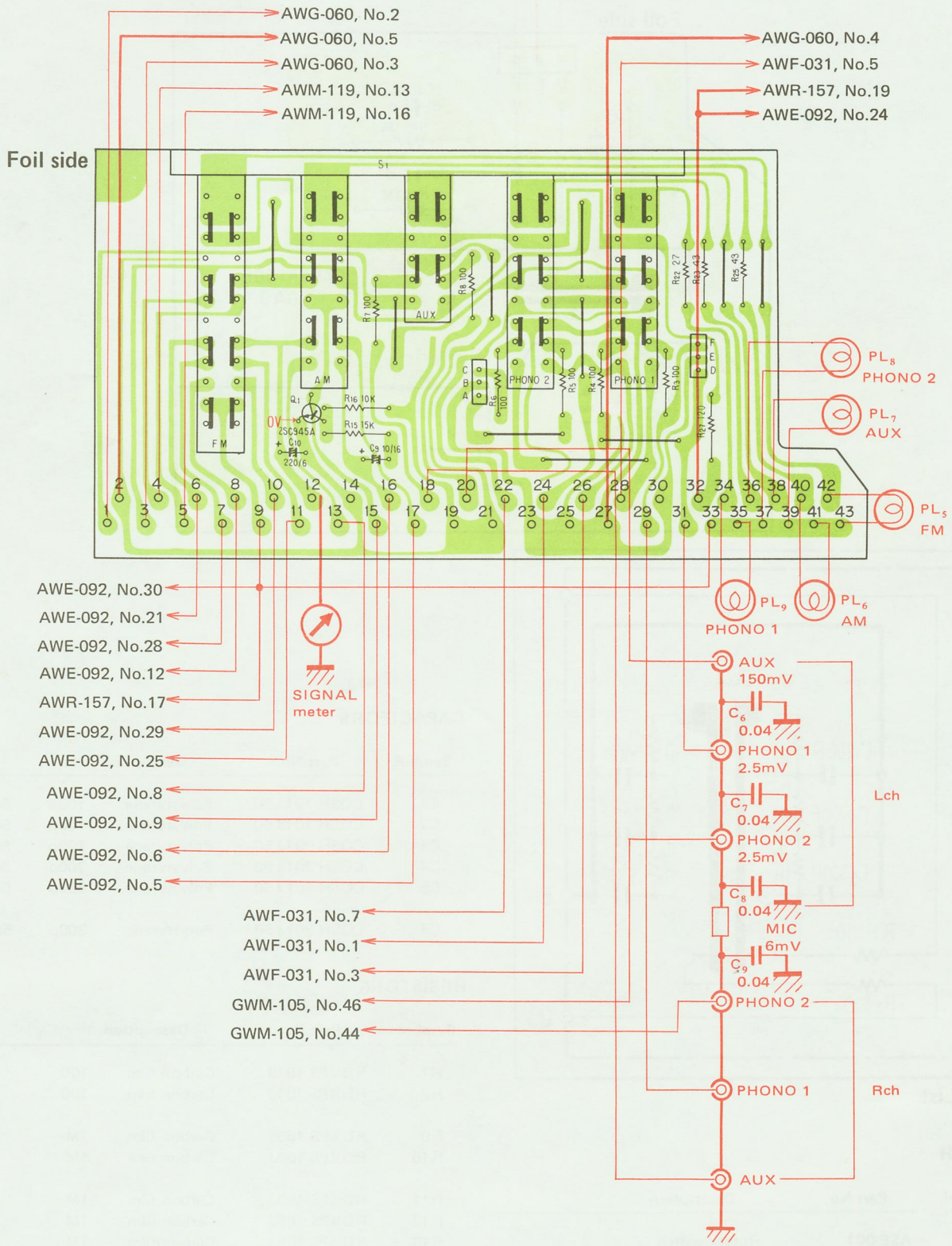

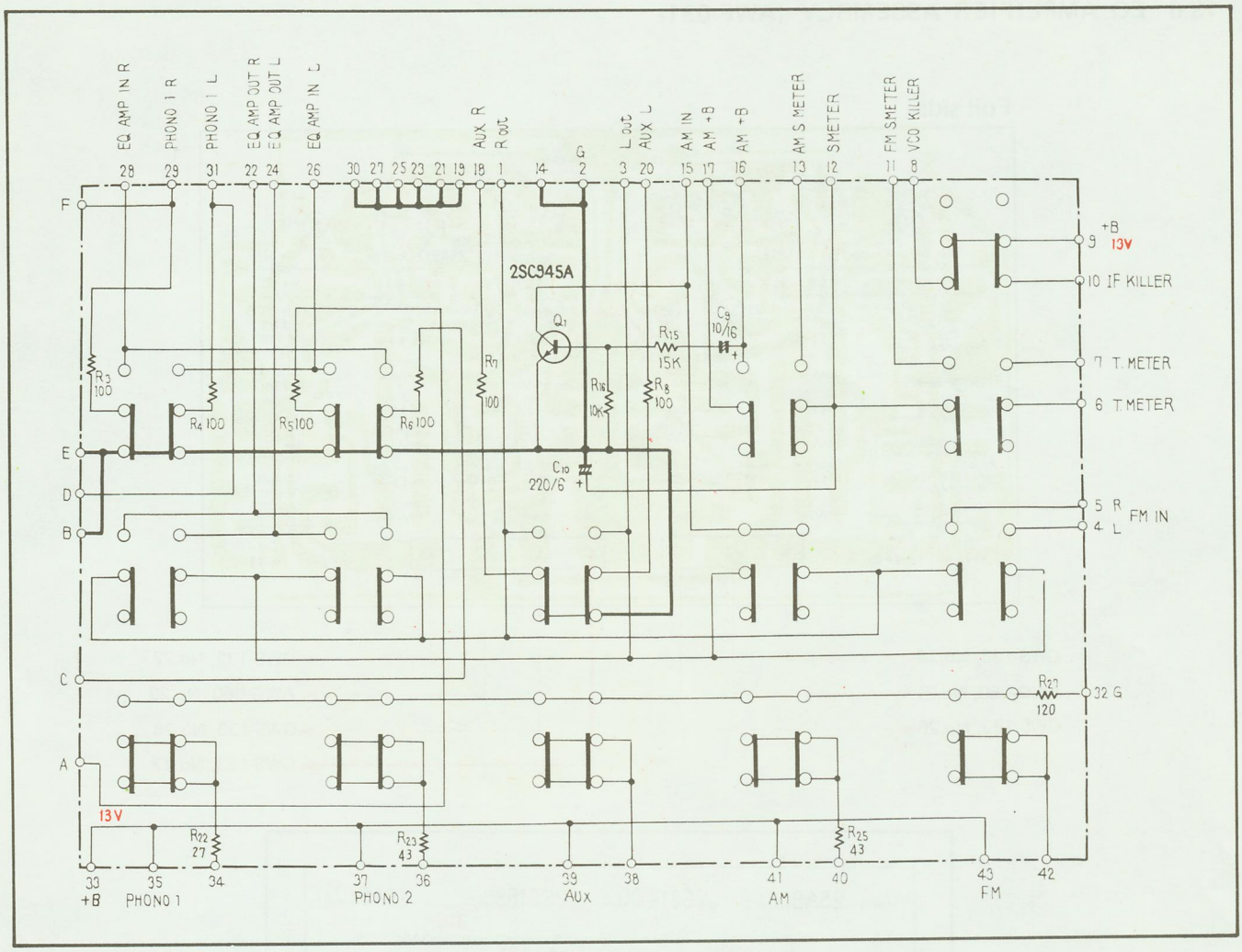

Parts List of Function Switch Assembly (GWS-173)

SWITCH

Symbol	Part No.	Description
S1	ASG-126	Push switch (FUNCTION)

CAPACITORS

Symbol	Part No.	Description		
C9	CEA 100P 16	Electrolytic	10	16V
C10	CEA 221P 6	Electrolytic	220	6V

RESISTORS

Symbol	Part No.	Description		
R3	RD¼PS 101J	Carbon film	100	
R4	RD¼PS 101J	Carbon film	100	
R5	RD¼PS 101J	Carbon film	100	
R6	RD¼PS 101J	Carbon film	100	
R7	RD¼PS 101J	Carbon film	100	
R8	RD¼PS 101J	Carbon film	100	
R15	RD¼PS 153J	Carbon film	15k	
R16	RD¼PS 103J	Carbon film	10k	
R22	RD¼PS 270J	Carbon film	27	
R23	RD¼PS 430J	Carbon film	43	
R25	RD¼PS 430J	Carbon film	43	
R27	RD½PS 121J	Carbon film	120	½W

SEMICONDUCTOR

Symbol	Part No.	Description
Q1	2SC945A-Q or R	Transistor

13.6 EQ AMPLIFIER ASSEMBLY (AWF-031)

Foil side

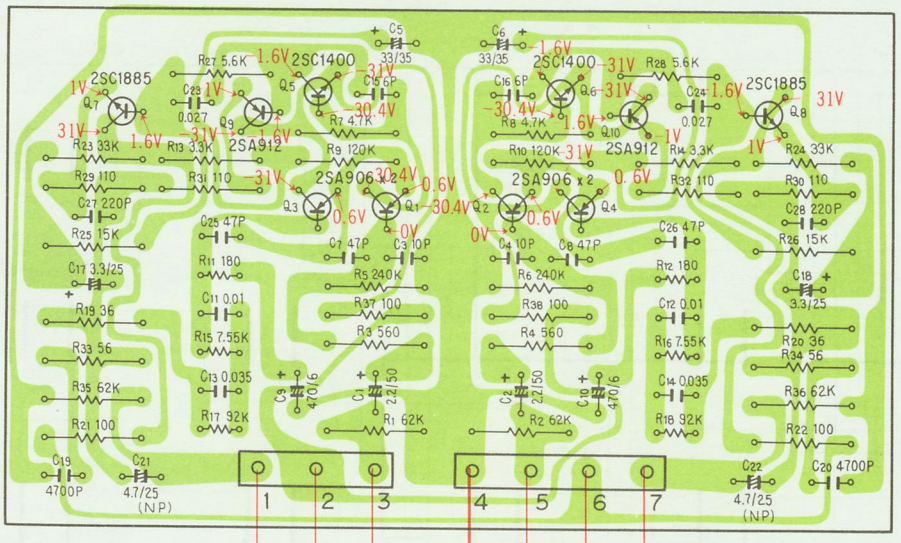

GWS-133, No.24

AWG-060, No.21

GWS-133, No.26

GWS-133, No.22

AWG-060, No.23

GWS-133, No.28

GWS-133, No.27

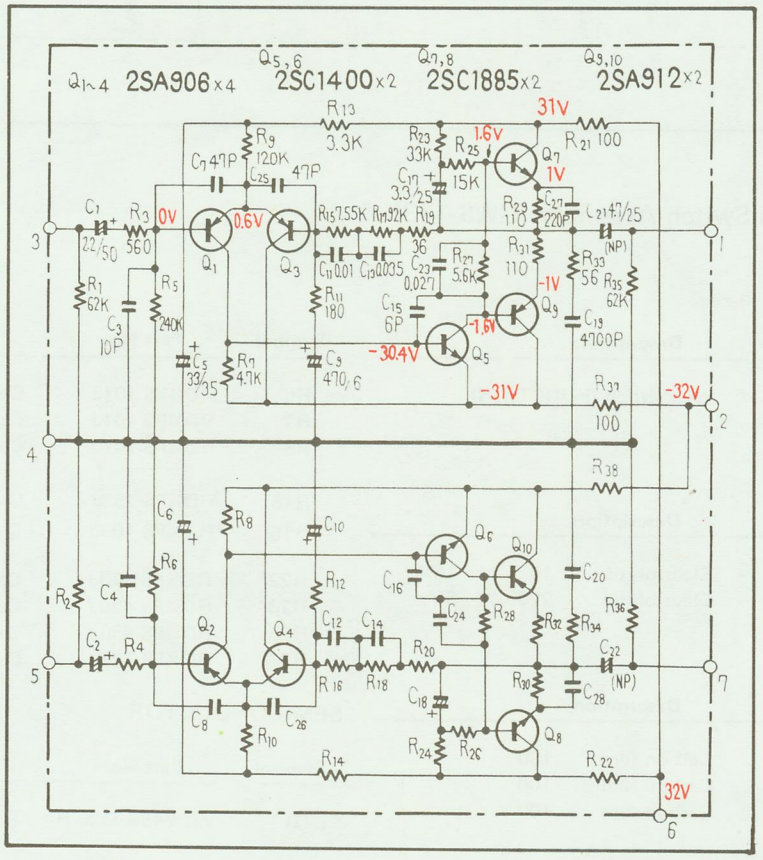

Parts List of EQ Amplifier Assembly (AWF-031)

CAPACITORS

Symbol	Part No.	Description		
C1	CEANL 2R2P 50	Electrolytic	2.2	50V
C2	CEANL 2R2P 50	Electrolytic	2.2	50V
C3	CCDSL 100F 50	Ceramic	10p	50V
C4	CCDSL 100F 50	Ceramic	10p	50V
C5	CEA 330P 35	Electrolytic	33	35V
C6	CEA 330P 35	Electrolytic	33	35V
C7	CCDSL 470K 50	Ceramic	47p	50V
C8	CCDSL 470K 50	Ceramic	47p	50V
C9	CEA 471P 6	Electrolytic	470	6V
C10	CEA 471P 6	Electrolytic	470	6V
C11	CQPA 103G 50	Polypropylene	0.01	50V
C12	CQPA 103G 50	Polypropylene	0.01	50V
C13	CQPA 353G 50	Polypropylene	0.035	50V
C14	CQPA 353G 50	Polypropylene	0.035	50V
C15	CCDSL 060D 50	Ceramic	6p	50V
C16	CCDSL 060D 50	Ceramic	6p	50V
C17	CEANL 3R3P 25	Electrolytic	3.3	25V
C18	CEANL 3R3P 25	Electrolytic	3.3	25V
C19	CQMA 472J 50	Mylar	4700p	50V
	(CKDYA 472J 50)	(Ceramic)	(4700p	50V)
C20	CQMA 472J 50	Mylar	4700p	50V
	(CKDYA 472J 50)	(Ceramic)	(4700p	50V)
C21	ACH-318	Electrolytic	4.7	25V
C22	ACH-318	Electrolytic	4.7	25V
C23	CQMA 273J 50	Mylar	0.027	50V
	(CKDYA 273J 50)	(Ceramic)	(0.027	50V)
C24	CQMA 273J 50	Mylar	0.027	50V
	(CKDYA 273J 50)	(Ceramic)	(0.027	50V)
C25	CCDSL 470K 50	Ceramic	47p	50V
C26	CCDSL 470K 50	Ceramic	47p	50V
C27	CCDSL 221K 50	Ceramic	220p	50V
C28	CCDSL 221K 50	Ceramic	220p	50V

RESISTORS

Symbol	Part No.	Description		
R1	RD¼PS 623J NL	Carbon film	62k	
R2	RD¼PS 623J NL	Carbon film	62k	
R3	RD¼PS 561J	Carbon film	560	
R4	RD¼PS 561J	Carbon film	560	
R5	RD¼PS 244J NL	Carbon film	240k	
R6	RD¼PS 244J NL	Carbon film	240k	
R7	RD¼PS 472J	Carbon film	4.7k	
R8	RD¼PS 472J	Carbon film	4.7k	
R9	RD¼PS 124J NL	Carbon film	120k	
R10	RD¼PS 124J NL	Carbon film	120k	
R11	RN1/5SQ 1800F	Metal film	180	1/5W
R12	RN1/5SQ 1800F	Metal film	180	1/5W
R13	RD¼PS 332J	Carbon film	3.3k	
R14	RD¼PS 332J	Carbon film	3.3k	
R15	ACN-011	Metal film	7.55k	
R16	ACN-011	Metal film	7.55k	
R17	ACN-012	Metal film	92k	
R18	ACN-012	Metal film	92k	
R19	RD¼PS 360J	Carbon film	36	
R20	RD¼PS 360J	Carbon film	36	
R21	RD¼PS 101J	Carbon film	100	
R22	RD¼PS 101J	Carbon film	100	
R23	RD¼PS 333J	Carbon film	33k	
R24	RD¼PS 333J	Carbon film	33k	
R25	RD¼PS 153J	Carbon film	15k	
R26	RD¼PS 153J	Carbon film	15k	
R27	RD¼PS 562J	Carbon film	5.6k	
R28	RD¼PS 562J	Carbon film	5.6k	
R29	RD¼PS 111J	Carbon film	110	
R30	RD¼PS 111J	Carbon film	110	
R31	RD¼PS 111J	Carbon film	110	
R32	RD¼PS 111J	Carbon film	110	
R33	RD¼PS 560J	Carbon film	56	
R34	RD¼PS 560J	Carbon film	56	
R35	RD¼PS 623J	Carbon film	62k	
R36	RD¼PS 623J	Carbon film	62k	
R37	RD¼PS 101J	Carbon film	100	
R38	RD¼PS 101J	Carbon film	100	

SEMICONDUCTORS

Symbol	Part No.	Description
Q1	2SA906-G or F (2SA978-F or G)	Transistor
Q2	2SA906-G or F (2SA978-F or G)	Transistor
Q3	2SA906-G or F (2SA978-F or G)	Transistor
Q4	2SA906-G or F (2SA978-F or G)	Transistor
Q5	2SC1400-F or E (2SC1919-F or G)	Transistor
Q6	2SC1400-F or E (2SC1919-F or G)	Transistor
Q7	2SC1885-R or Q (2SC1735-C or D)	Transistor
Q8	2SC1885-R or Q (2SC1735-C or D)	Transistor
Q9	2SA912-R or Q (2SA850-C or D)	Transistor
Q10	2SA912-R or Q (2SA850-C or D)	Transistor

13.7 FLAT AMPLIFIER ASSEMBLY (AWG-060)

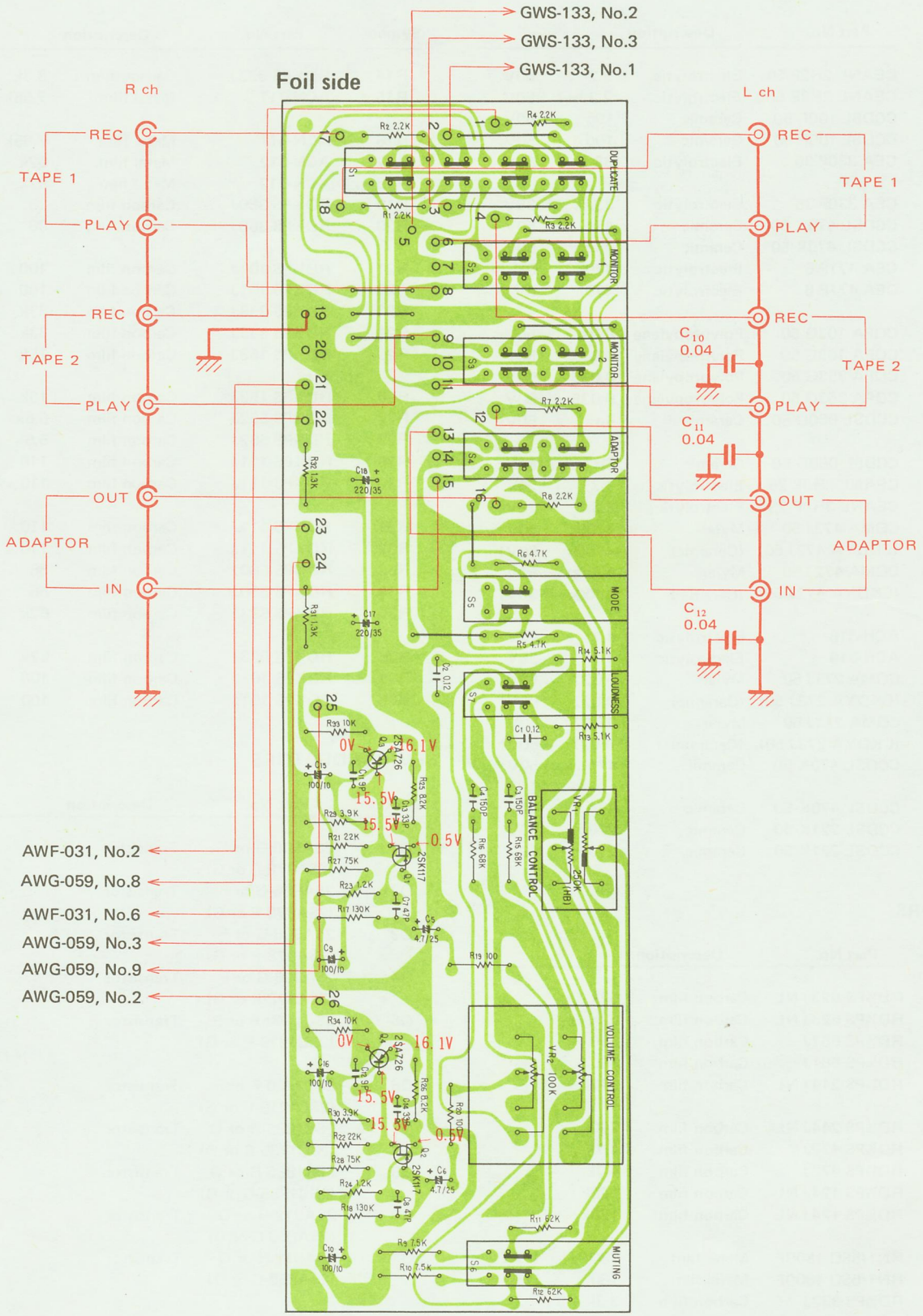

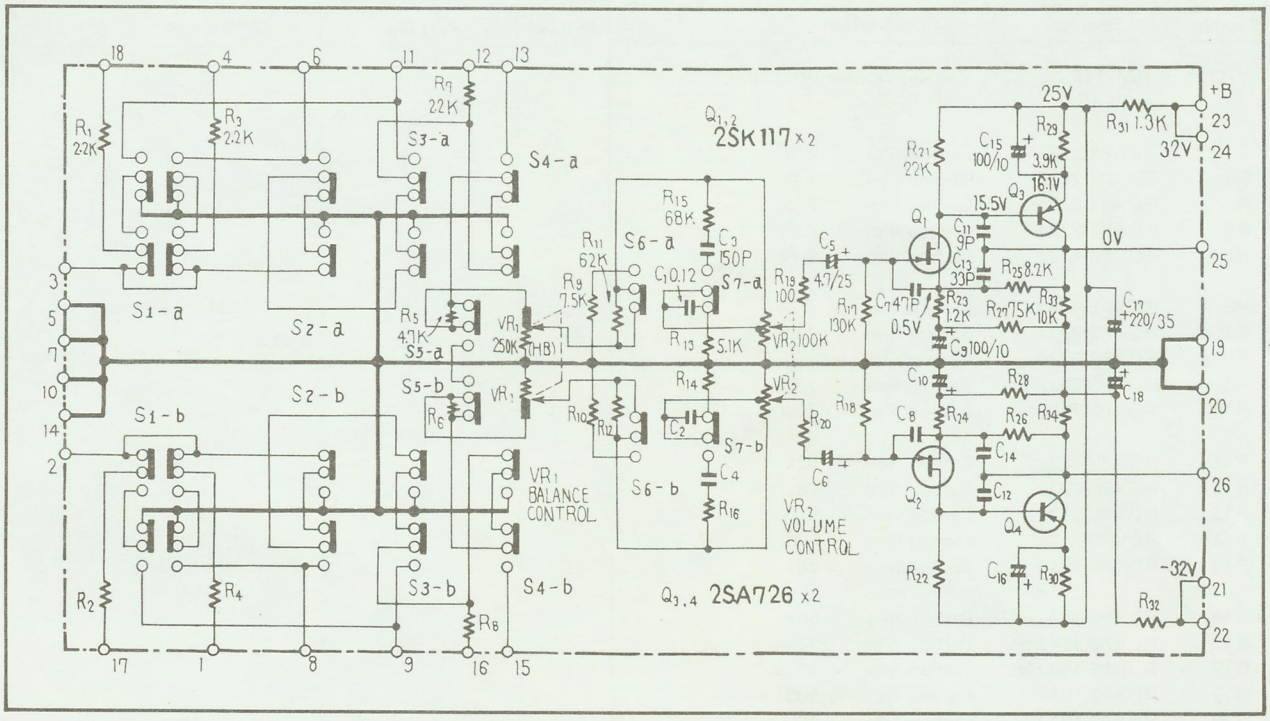

Parts List of Flat Amplifier Assembly (AWG-060)

SWITCHES

Symbol	Part No.	Description
S1	ASK-146	Lever switch (DUPLICATE)
S2	ASK-145	Lever switch (MONITOR 1)
S3	ASK-145	Lever switch (MONITOR 2)
S4	ASK-145	Lever switch (ADAPTOR)
S5	ASK-144	Lever switch (MODE)
S6	ASK-144	Lever switch (MUTING)
S7	ASK-144	Lever switch (LOUDNESS)

CAPACITORS

Symbol	Part No.	Description		
C1	CQMA 124K 50	Mylar	0.12	50V
C2	CQMA 124K 50	Mylar	0.12	50 V
C3	CQSH 151J 50	Polystyrene	150p	50V
C4	CQSH 151J 50	Polystyrene	150p	50V
C5	CEANL 4R7P 25	Electrolytic	4.7	25V
C6	CEANL 4R7P 25	Electrolytic	4.7	25V
C7	CCDSL 470K 50	Ceramic	47p	50V
C8	CCDSL 470K 50	Ceramic	47p	50V
C9	CEA 101P 10	Electrolytic	100	10V
C10	CEA 101P 10	Electrolytic	100	10V
C11	CCDSL 090F 50	Ceramic	9p	50V
C12	CCDSL 090F 50	Ceramic	9p	50V
C13	CCDSL 330K 50	Ceramic	33p	50V
C14	CCDSL 330K 50	Ceramic	33p	50V
C15	CEA 101P 10	Electrolytic	100	10V
C16	CEA 101P 10	Electrolytic	100	10V
C17	CEA 221P 35	Electrolytic	220	35V
C18	CEA 221P 35	Electrolytic	220	35V

RESISTORS

Symbol	Part No.	Description
VR1	ACV-190	Variable resistor (BALANCE)

Symbol	Part No.	Description	
VR2	ACW-116 (ACV-162)	Variable resistor (VOLUME)	
R1	RD¼PS 222J	Carbon film	2.2k
R2	RD¼PS 222J	Carbon film	2.2k
R3	RD¼PS 222J	Carbon film	2.2k
R4	RD¼PS 222J	Carbon film	2.2k
R5	RD¼PS 472J	Carbon film	4.7k
R6	RD¼PS 472J	Carbon film	4.7k
R7	RD¼PS 222J	Carbon film	2.2k
R8	RD¼PS 222J	Carbon film	2.2k
R9	RD¼PS 752J	Carbon film	7.5k
R10	RD¼PS 752J	Carbon film	7.5k
R11	RD¼PS 623J	Carbon film	62k
R12	RD¼PS 623J	Carbon film	62k
R13	RD¼PS 512J	Carbon film	5.1k
R14	RD¼PS 512J	Carbon film	5.1k
R15	RD¼PS 683J	Carbon film	68k
R16	RD¼PS 683J	Carbon film	68k
R17	RD¼PS 134J NL	Carbon film	130k
R18	RD¼PS 134J NL	Carbon film	130k
R19	RD¼PS 101J	Carbon film	100
R20	RD¼PS 101J	Carbon film	100
R21	RD¼PS 223J	Carbon film	22k
R22	RD¼PS 223J	Carbon film	22k
R23	RD¼PS 122J	Carbon film	1.2k
R24	RD¼PS 122J	Carbon film	1.2k
R25	RD¼PS 822J	Carbon film	8.2k
R26	RD¼PS 822J	Carbon film	8.2k
R27	RD¼PS 753J	Carbon film	75k
R28	RD¼PS 753J	Carbon film	75k
R29	RD¼PS 392J	Carbon film	3.9k
R30	RD¼PS 392J	Carbon film	3.9k
R31	RD¼PS 132J	Carbon film	1.3k
R32	RD¼PS 132J	Carbon film	1.3k
R33	RD¼PS 103J	Carbon film	10k
R34	RD¼PS 103J	Carbon film	10k

SEMICONDUCTORS

Symbol	Part No.	Description
Q1	2SK117-GR or Y	FET
Q2	2SK117-GR or Y	FET
Q3	2SA726-G or F	Transistor
Q4	2SA726-G or F	Transistor

List of Changed Parts for Factory Modification

Symbol	Part No.	Description

13.8 TONE AMPLIFIER ASSEMBLY (AWG-059)

Foil side

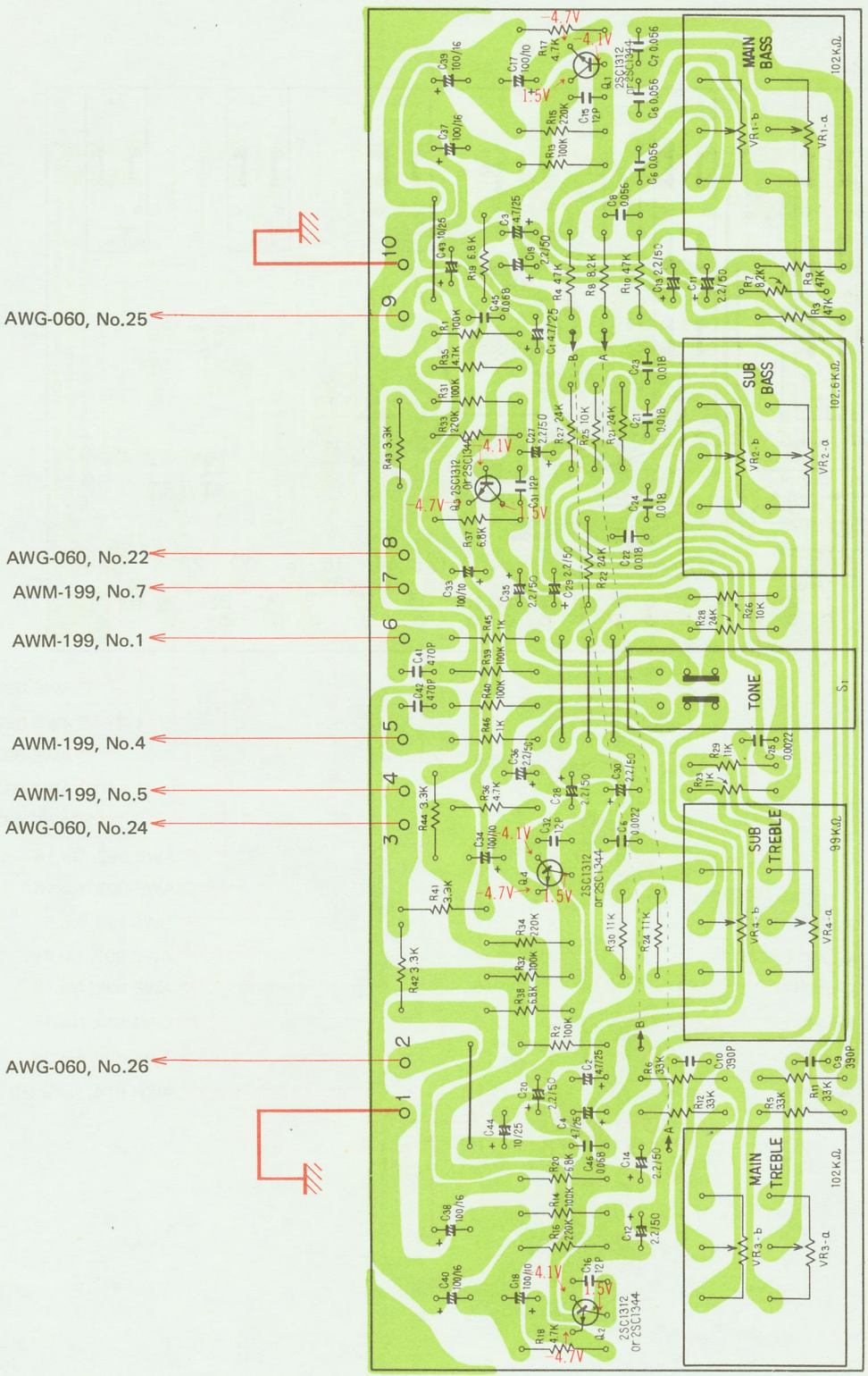

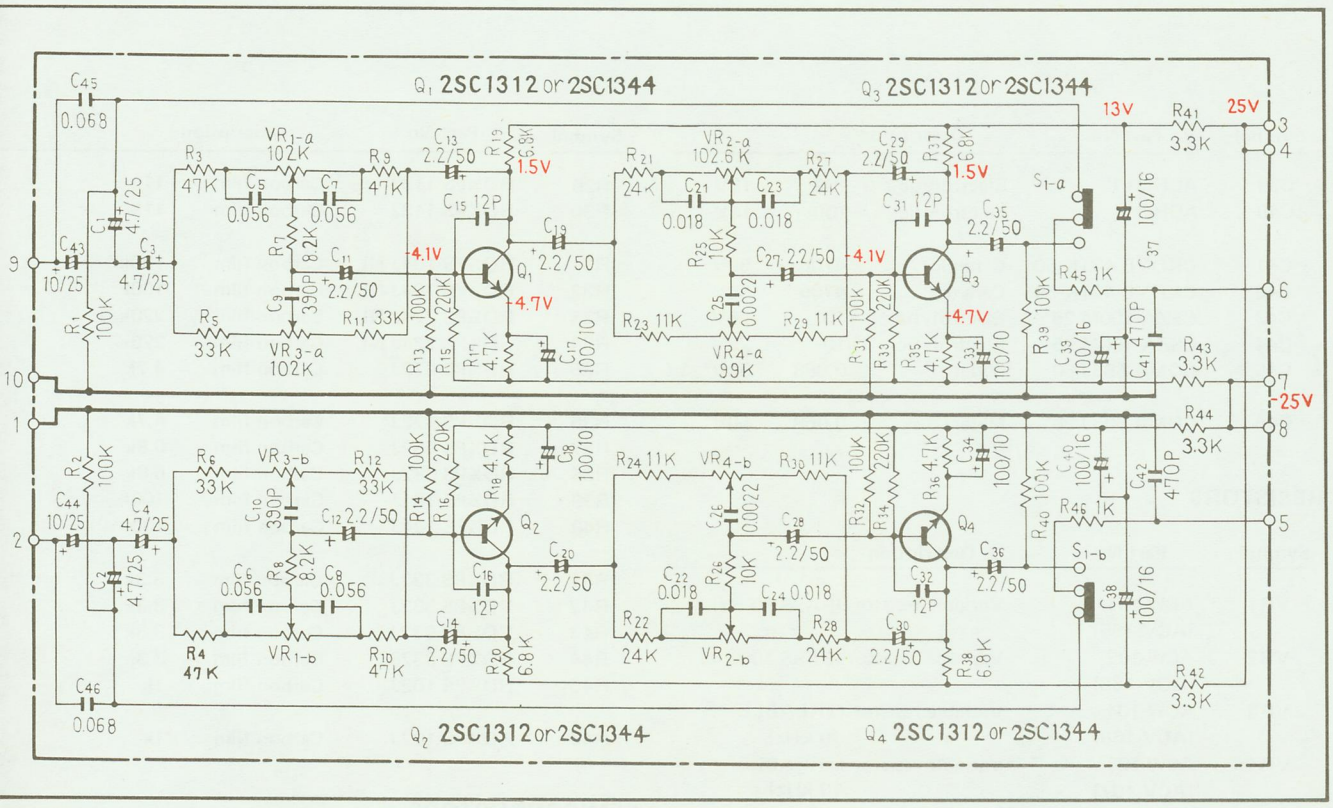

Parts List of Tone Control Assembly (AWG-059)

SWITCH

Symbol	Part No.	Description
S1	ASK-144	Lever switch (TONE)

CAPACITORS

Symbol	Part No.	Description		
C1	CSZA 4R7M 25	Electrolytic	4.7	25V
C2	CSZA 4R7M 25	Electrolytic	4.7	25V
C3	CSZA 4R7M 25	Electrolytic	4.7	25V
C4	CSZA 4R7M 25	Electrolytic	4.7	25V
C5	CQMA 563J 50	Mylar	0.056	50V
C6	CQMA 563J 50	Mylar	0.056	50V
C7	CQMA 563J 50	Mylar	0.056	50V
C8	CQMA 563J 50	Mylar	0.056	50V
C9	CQSA 391J 50	Polystyrene	390p	50V
C10	CQSA 391J 50	Polystyrene	390p	50V
C11	CEANL 2R2P 50	Electrolytic	2.2	50V
C12	CEANL 2R2P 50	Electrolytic	2.2	50V
C13	CEANL 2R2P 50	Electrolytic	2.2	50V
C14	CEANL 2R2P 50	Electrolytic	2.2	50V
C15	CCDSL 120K 50	Ceramic	12p	50V
C16	CCDSL 120K 50	Ceramic	12p	50V
C17	ACH-312	Electrolytic	100	10V
C18	ACH-312	Electrolytic	100	10V
C19	CEANL 2R2P 50	Electrolytic	2.2	50V
C20	CEANL 2R2P 50	Electrolytic	2.2	50V
C21	CQMA 183J 50	Mylar	0.018	50V
C22	CQMA 183J 50	Mylar	0.018	50V
C23	CQMA 183J 50	Mylar	0.018	50V
C24	CQMA 183J 50	Mylar	0.018	50V
C25	CKDYA 222J 50	Ceramic	2200p	50V
C26	CKDYA 222J 50	Ceramic	2200p	50V
C27	CEANL 2R2P 50	Electrolytic	2.2	50V
C28	CEANL 2R2P 50	Electrolytic	2.2	50V
C29	CEANL 2R2P 50	Electrolytic	2.2	50V
C30	CEANL 2R2P 50	Electrolytic	2.2	50V
C31	CCDSL 120K 50	Ceramic	12p	50V
C32	CCDSL 120K 50	Ceramic	12p	50V
C33	ACH-312	Electrolytic	100	10V
C34	ACH-312	Electrolytic	100	10V
C35	CEANL 2R2P 50	Electrolytic	2.2	50V
C36	CEANL 2R2P 50	Electrolytic	2.2	50V
C37	ACH-311	Electrolytic	100	16V
C38	ACH-311	Electrolytic	100	16V

Symbol	Part No.	Description		
C39	ACH-311	Electrolytic	100	16V
C40	ACH-311	Electrolytic	100	16V
C41	CKDYB 471K 50	Ceramic	470p	50V
C42	CKDYB 471K 50	Ceramic	470p	50V
C43	CSZA 100M 25	Electrolytic	10	25V
C44	CSZA 100M 25	Electrolytic	10	25V
C45	CQMA 683J 50	Mylar	0.068	50V
C46	CQMA 683J 50	Mylar	0.068	50V

RESISTORS

Symbol	Part No.	Description	
VR1	ACW-101 (ACV-165)	Variable resistor (BASS 50 Hz)	
VR2	ACW-102 (ACV-166)	Variable resistor (BASS 100 Hz)	
VR3	ACW-104 (ACV-168)	Variable resistor (TREABLE 20 kHz)	
VR4	ACW-103 (ACV-167)	Variable resistor (TREABLE 10 kHz)	
R1	RD¼PS 104J	Carbon film	100k
R2	RD¼PS 104J	Carbon film	100k
R3	RD¼PS 473J	Carbon film	47k
R4	RD¼PS 473J	Carbon film	47k
R5	RD¼PS 333J	Carbon film	33k
R6	RD¼PS 333J	Carbon film	33k
R7	RD¼PS 822J	Carbon film	8.2k
R8	RD¼PS 822J	Carbon film	8.2k
R9	RD¼PS 473J	Carbon film	47k
R10	RD¼PS 473J	Carbon film	47k
R11	RD¼PS 333J	Carbon film	33k
R12	RD¼PS 333J	Carbon film	33k
R13	RD¼PS 104J NL	Carbon film	100k
R14	RD¼PS 104J NL	Carbon film	100k
R15	RD¼PS 224J NL	Carbon film	220k
R16	RD¼PS 224J NL	Carbon film	220k
R17	RD¼PS 472J	Carbon film	4.7k
R18	RD¼PS 472J	Carbon film	4.7k
R19	RD¼PS 682J	Carbon film	6.8k
R20	RD¼PS 682J	Carbon film	6.8k
R21	RD¼PS 243J	Carbon film	24k
R22	RD¼PS 243J	Carbon film	24k
R23	RD¼PS 113J	Carbon film	11k
R24	RD¼PS 113J	Carbon film	11k
R25	RD¼PS 103J	Carbon film	10k
R26	RD¼PS 103J	Carbon film	10k
R27	RD¼PS 243J	Carbon film	24k
R28	RD¼PS 243J	Carbon film	24k
R29	RD¼PS 113J	Carbon film	11k
R30	RD¼PS 113J	Carbon film	11k
R31	RD¼PS 104J NL	Carbon film	100k
R32	RD¼PS 104J NL	Carbon film	100k
R33	RD¼PS 224J NL	Carbon film	220k
R34	RD¼PS 224J NL	Carbon film	220k
R35	RD¼PS 472J	Carbon film	4.7k
R36	RD¼PS 472J	Carbon film	4.7k
R37	RD¼PS 682J	Carbon film	6.8k
R38	RD¼PS 682J	Carbon film	6.8k
R39	RD¼PS 104J	Carbon film	100k
R40	RD¼PS 104J	Carbon film	100k
R41	RD¼PS 332J	Carbon film	3.3k
R42	RD¼PS 332J	Carbon film	3.3k
R43	RD¼PS 332J	Carbon film	3.3k
R44	RD¼PS 332J	Carbon film	3.3k
R45	RD¼PS 102J	Carbon film	1k
R46	RD¼PS 102J	Carbon film	1k

SEMICONDUCTORS

Symbol	Part No.	Description
Q1	2SC 1312-G or H (2SC 1344-E or F)	Transistor
Q2	2SC 1312-G or H (2SC 1344-E or F)	Transistor
Q3	2SC 1312-G or H (2SC 1344-E or F)	Transistor
Q4	2SC 1312-G or H (2SC 1344-E or F)	Transistor

List of Changed Parts for Factory Modification

Symbol	Part No.	Description

13.9 FILTER AMPLIFIER ASSEMBLY (AWM-119)

Foil side

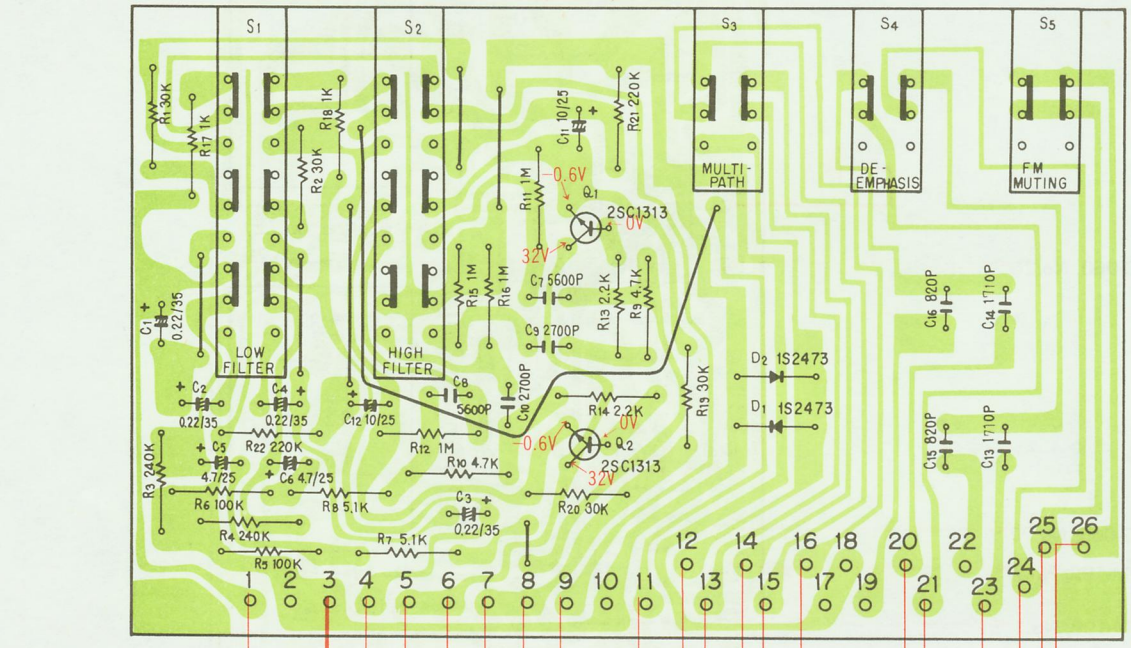

AWG-059, No.6

AWG-059, No.5

AWG-059, No.4

AWR-157, No.12

AWG-059, No.7

AWR-157, No.21

AWH-074, No.3

AWE-092, No.20

AWE-092, No.10

AWE-092, No.14

AWE-092, No.22

AWE-092, No.23

AWE-092, No.16

AWE-092, No.18

GWS-133, No.5

AWE-092, No.21

AWE-092, No.19

GWS-133, No.4

AWE-092, No.26

AWH-074, No.3 (R)

POWER AMP IN

C_{133} 0.04

PRE OUT

PRE OUT

POWER AMP IN

Lch

Rch

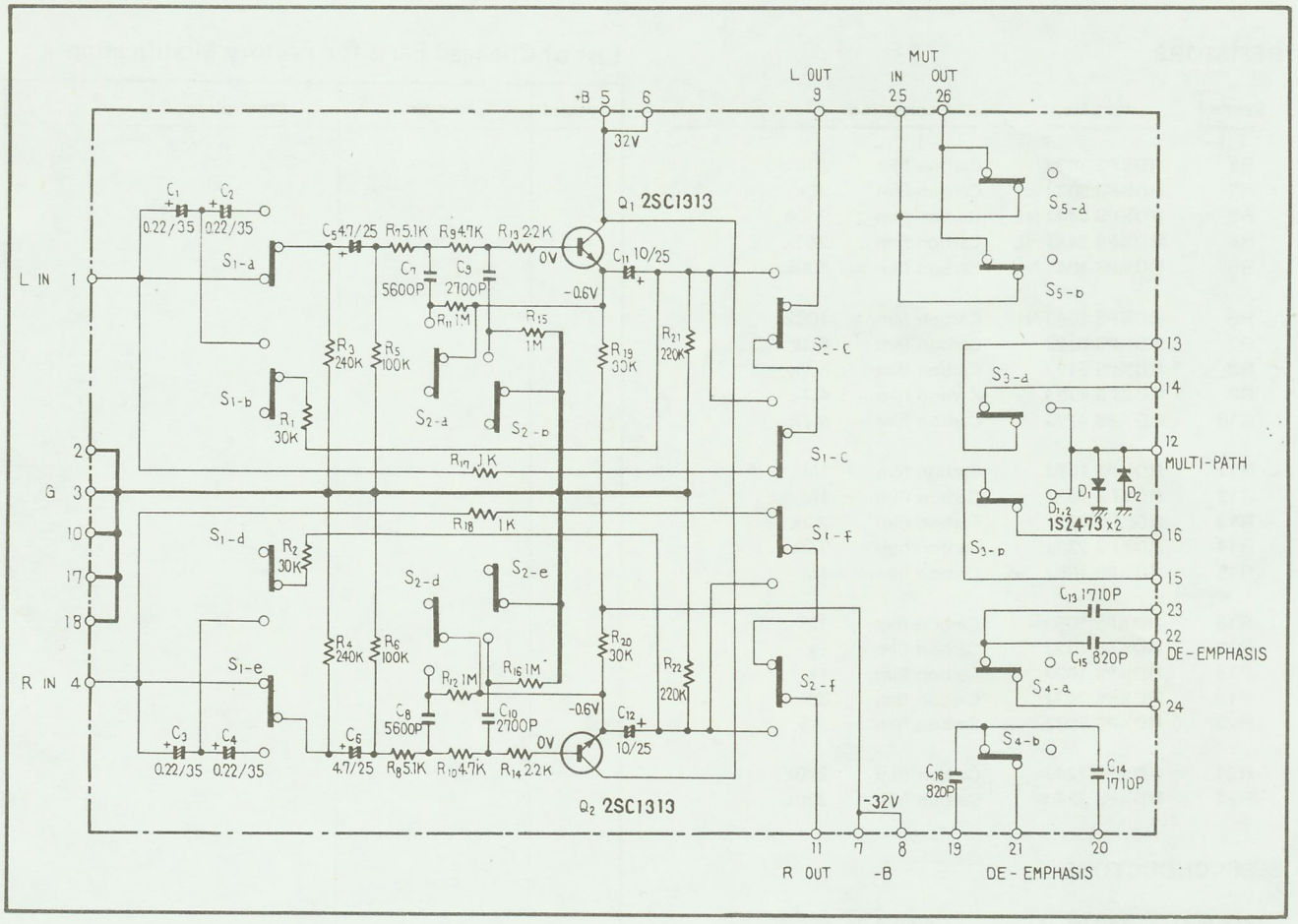

Parts List of Filter Assembly (AWM-119)

SWITCH

Symbol	Part No.	Description
S1~S5	ASG-127	Push switch (LOW FILTER, HIGH FILTER, MULTIPATH, DE-EMPHASIS, FM MUTING)

CAPACITORS

Symbol	Part No.	Description		
C1	CSZA R22M 35	Electrolytic	0.22	35V
C2	CSZA R22M 35	Electrolytic	0.22	35V
C3	CSZA R22M 35	Electrolytic	0.22	35V
C4	CSZA R22M 35	Electrolytic	0.22	35V
C5	CSZA 4R7M 25	Electrolytic	4.7	25V
C6	CSZA 4R7M 25	Electrolytic	4.7	25V
C7	CKDYA 562J 50 (CQMA 562J 50)	Ceramic (Mylar)	0.0056	50V
C8	CKDYA 562J 50 (CQMA 562J 50)	Ceramic (Mylar)	0.0056	50V
C9	CKDYA 272J 50 (CQMA 272J 50)	Ceramic (Mylar)	0.0027	50V
C10	CKDYA 272J 50 (CQMA 272J 50)	Ceramic (Mylar)	0.0027	50V
C11	CSZA 100M 25	Electrolytic	10	25V
C12	CSZA 100M 25	Electrolytic	10	25V
C13	ACE-043	Polystyrene	1710p	50V
C14	ACE-043	Polystyrene	1710p	50V
C15	CQSA 821G 50	Polystyrene	820p	50V
C16	CQSA 821G 50	Polystyrene	820p	50V

RESISTORS

Symbol	Part No.	Description	
R1	RD¼PS 303J	Carbon film	30k
R2	RD¼PS 303J	Carbon film	30k
R3	RD¼PS 244J NL	Carbon film	240k
R4	RD¼PS 244J NL	Carbon film	240k
R5	RD¼PS 104J NL	Carbon film	100k
R6	RD¼PS 104J NL	Carbon film	100k
R7	RD¼PS 512J	Carbon film	5.1k
R8	RD¼PS 512J	Carbon film	5.1k
R9	RD¼PS 472J	Carbon film	4.7k
R10	RD¼PS 472J	Carbon film	4.7k
R11	RD¼PS 105J	Carbon film	1M
R12	RD¼PS 105J	Carbon film	1M
R13	RD¼PS 222J	Carbon film	2.2k
R14	RD¼PS 222J	Carbon film	2.2k
R15	RD¼PS 105J	Carbon film	1M
R16	RD¼PS 105J	Carbon film	1M
R17	RD¼PS 102J	Carbon film	1k
R18	RD¼PS 102J	Carbon film	1k
R19	RD¼PS 303J	Carbon film	30k
R20	RD¼PS 303J	Carbon film	30k
R21	RD¼PS 224J	Carbon film	220k
R22	RD¼PS 224J	Carbon film	220k

SEMICONDUCTORS

Symbol	Part No.	Description
Q1	2SC1313-G or F	Transistor
Q2	2SC1313-G or F	Transistor
D1	1S 2473	Diode
D2	1S 2473	Doide

List of Changed Parts for Factory Modification

Symbol	Part No.	Description

13.10 POWER AMPLIFIER ASSEMBLY (AWH-074)

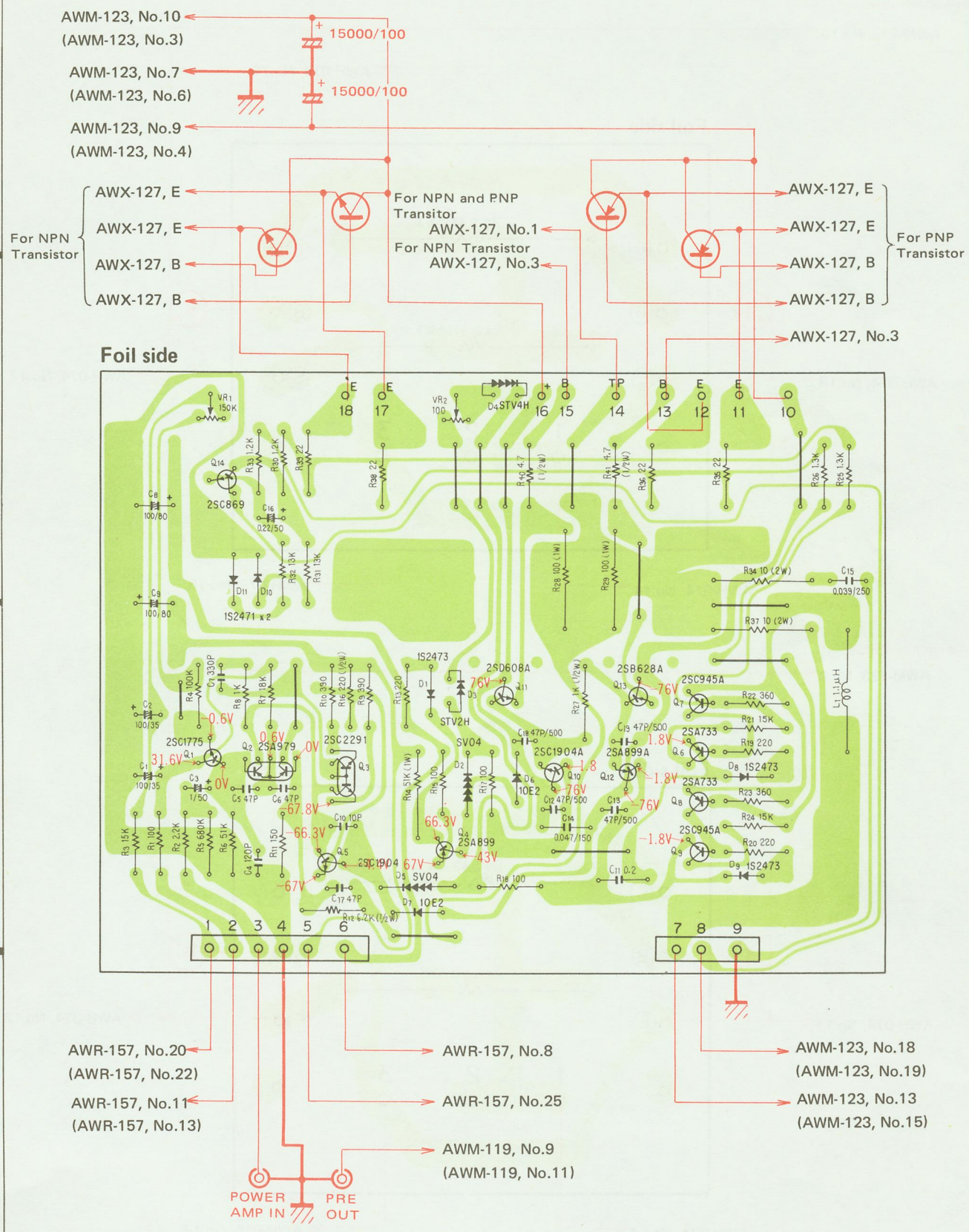

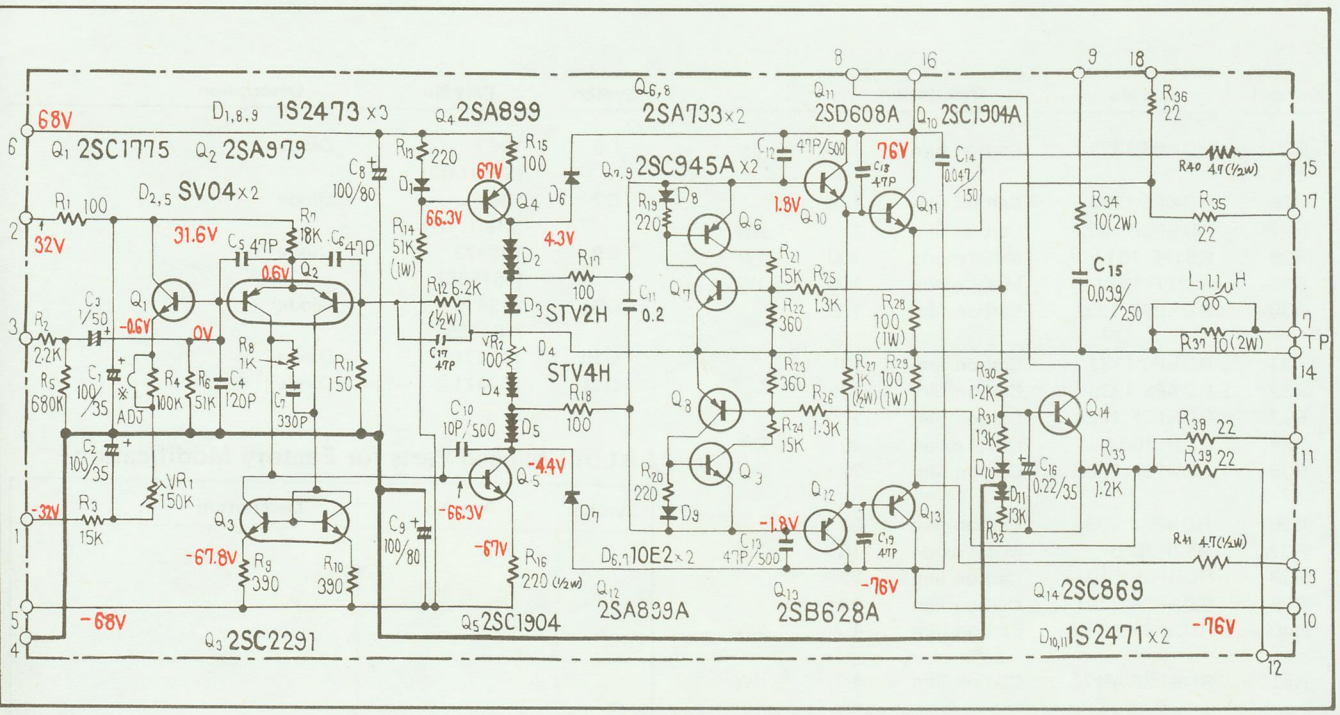

Parts List of Power Amplifier Assembly (AWH-074)

CAPACITORS

Symbol	Part No.	Description		
C1	CEA 101P 35	Electrolytic	100	35V
C2	CEA 101P 35	Electrolytic	100	35V
C3	CEANL 010P 50	Electrolytic	1	50 V
C4	CCDSL 121K 50	Ceramic	120p	50V
C5	CCDSL 470K 50	Ceramic	47p	50V
C6	CCDSL 470K 50	Ceramic	47p	50V
C7	CCDSL 331K 50	Ceramic	330p	50V
C8	CEA 101P 80	Electrolytic	100	80V
C9	CEA 101P 80	Electrolytic	100	80V
C10	CCDSL 100K 500	Ceramic	10p	500V
C11	CQMA 204J 50	Mylar	0.2	50V
C12	CCDSL 470K 500	Ceramic	47p	500V
C13	CCDSL 470K 500	Ceramic	47p	500V
C14	ACG-009	Ceramic	0.047	150V
C15	CQMA 393J 250	Mylar	0.039	250V
C16	CSZA R22M 35	Electrolytic	0.22	35V
C17	CCDSL 470K 50	Ceramic	47p	50V
C18	CCDSL 470K 500	Ceramic	47p	500V
C19	CCDSL 470K 500	Ceramic	47p	500V

RESISTORS

Symbol	Part No.	Description
VR1	ACP-063	Semi fixed (150k)
VR2	ACP-032	Semi fixed (100)

Symbol	Part No.	Description		
R1	RD¼PSF 101J	Carbon film	100	
R2	RD¼PS 222J	Carbon film	2.2k	
R3	RD¼PS 153J	Carbon film	15k	
R4	RD¼PS 104J	Carbon film	100k	
R5	RD¼PS 684J NL	Carbon film	680k	
R6	RD¼PS 513J NL	Carbon film	51k	
R7	RD¼PS 183J	Carbon film	18k	
R8	RD¼PS 102J	Carbon film	Ik	
R9	RD¼PS 391J	Carbon film	390	
R10	RD¼PS 391J	Carbon film	390	
R11	RD¼ PSF 151J	Carbon film	150	
R12	RD½PS 622J	Carbon film	6.2k	½W
R13	RD¼PSF 221J	Carbon film	220	
R14	PS1P 513J	Metal oxide	51k	1W
R15	RD¼PSF 101J	Carbon film	100	
R16	RD½PSF 221J	Carbon film	220	½W
R17	RD¼PSF 101J	Carbon film	100	
R18	RD¼PSF 101J	Carbon film	100	
R19	RD¼PSF 221J	Carbon film	220	
R20	RD¼PSF 221J	Carbon film	220	
R21	RD¼PS 153J	Carbon film	15k	
R22	RD¼PSF 361J	Carbon film	360	
R23	RD¼PSF 361J	Carbon film	360	
R24	RD¼PS 153J	Carbon film	15k	

Symbol	Part No.	Description		
R25	RD¼PS 132J	Carbon film	1.3k	
R26	RD¼PS 132J	Carbon film	1.3k	
R27	RD½PSF 102J	Carbon film	1k	½W
R28	RS1PF 101J	Metal oxide	100	1W
R29	RS1PF 101J	Metal oxide	100	1W
R30	RD¼PSF 122J	Carbon film	1.2k	
R31	RD¼PS 133J	Carbon film	13k	
R32	RD¼PS 133J	Carbon film	13k	
R33	RD¼PSF 122J	Carbon film	1.2k	
R34	RS2P 100J	Metal oxide	10	2W
R35	RD¼PSF 220J	Carbon film	22	
R36	RD¼PSF 220J	Carbon film	22	
R37	RS2P 100J	Metal oxide	10	2W
R38	RD¼PSF 220J	Carbon film	22	
R39	RD¼PSF 220J	Carbon film	22	
R40	RD½PSF 4R7J	Carbon film	4.7	½W
R41	RD½PSF 4R7J	Carbon film	4.7	½W

OTHERS

Symbol	Part No.	Description
	ANH-203	Heat sink
L1	ATH-012	AF choke coil 1.1μH

SEMICONDUCTORS

Symbol	Part No.	Description
Q1	2SC1775A-E	Transistor
Q2	2SA979-F	Transistor
Q3	2SC2291-G or F	Transistor
Q4	2SA899-V or B	Transistor
Q5	2SC1904-V or B	Transistor
Q6	2SA733-Q or R	Transistor
Q7	2SC945A-Q or R	Transistor
Q8	2SA733-Q or R	Transistor
Q9	2SC945A-Q or R	Transistor
Q10	2SC1904A-V or B	Transistor
Q11	2SD608A-R or Q	Transistor
Q12	2SA899A-V or B	Transistor
Q13	2SB628A-R or Q	Transistor
Q14	2SC869-D or C	Transistor
D1	1S2473 (1S1555)	Diode
D2	SV-04	Varistor
D3	STV2H	Varistor
D4	STV4H	Varistor
D5	SV-04	Varistor
D6	10E2 (SIB01-02)	Diode
D7	10E (SIB01-02)	Diode
D8	1S2473 (1S1555)	Diode
D9	1S2473 (1S1555)	Diode
D10	1S2471	Diode
D11	1S2471	Diode

List of Changed Parts for Factory Modification

Symbol	Part No.	Description

13.11 RESISTOR ASSEMBLY (AWX-127)

For NPN Transistor

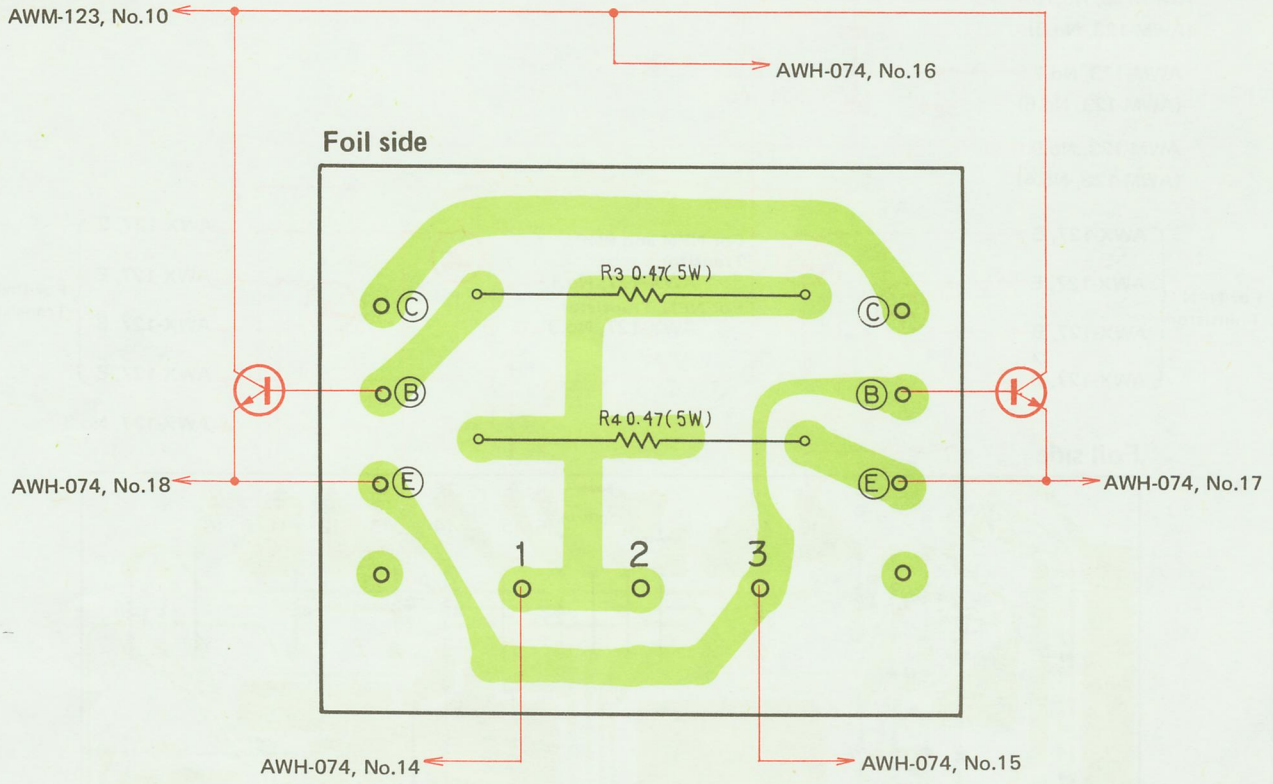

For PNP Transistor

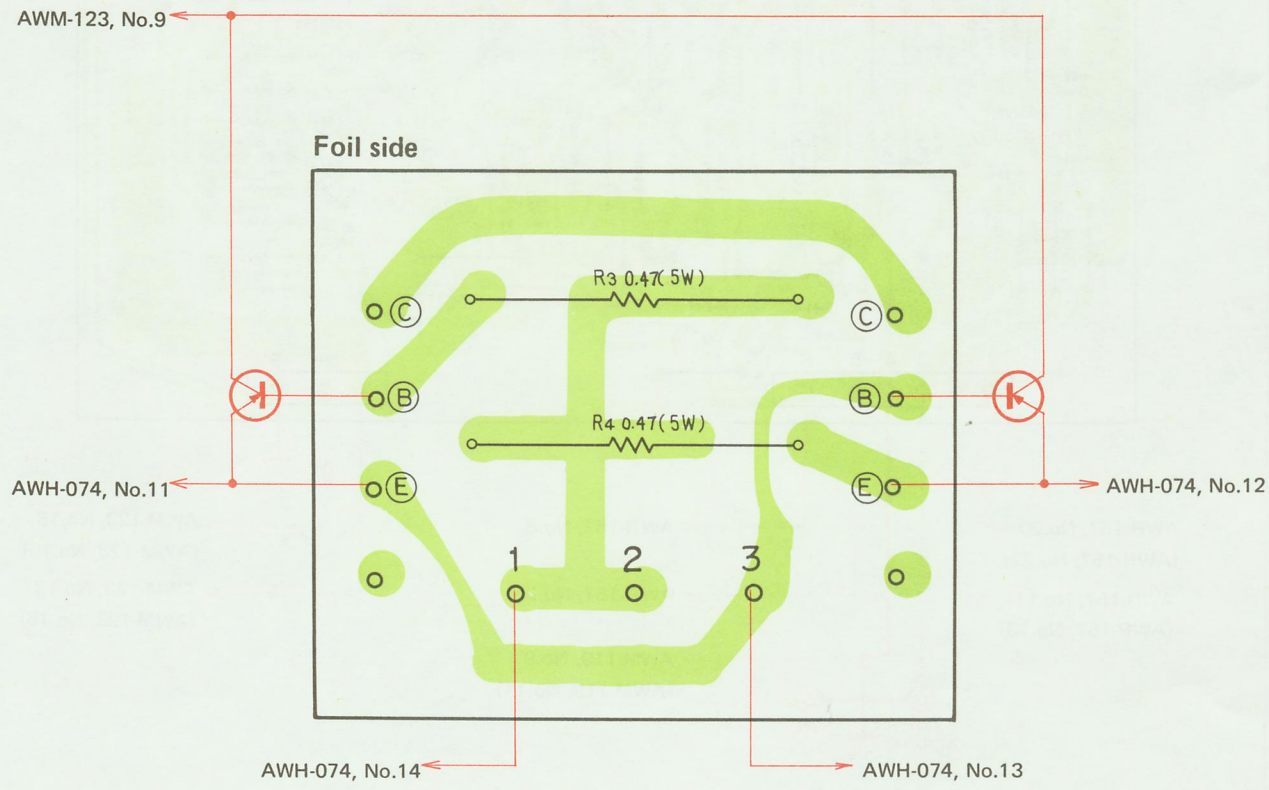

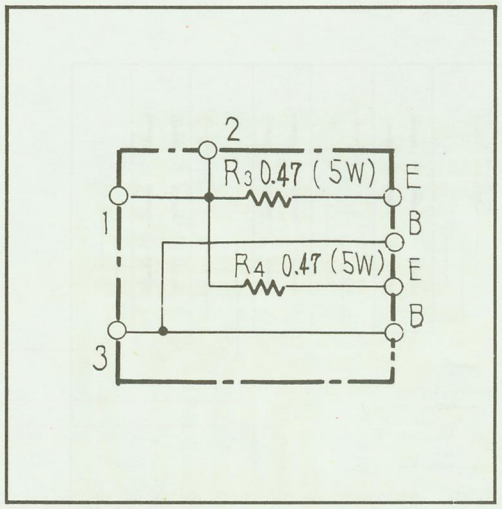

Parts List of Resistor Assembly (AWX-127)

RESISTORS

Symbol	Part No.	Description		
R3	ACN-028	Wire wound	0.47	5W
R4	ACN-028	Wire wound	0.47	5W

List of Changed Parts for Factory Modification

Symbol	Part No.	Description

13.12 METER AMPLIFIER ASSEMBLY (AWM-121)

Foil side

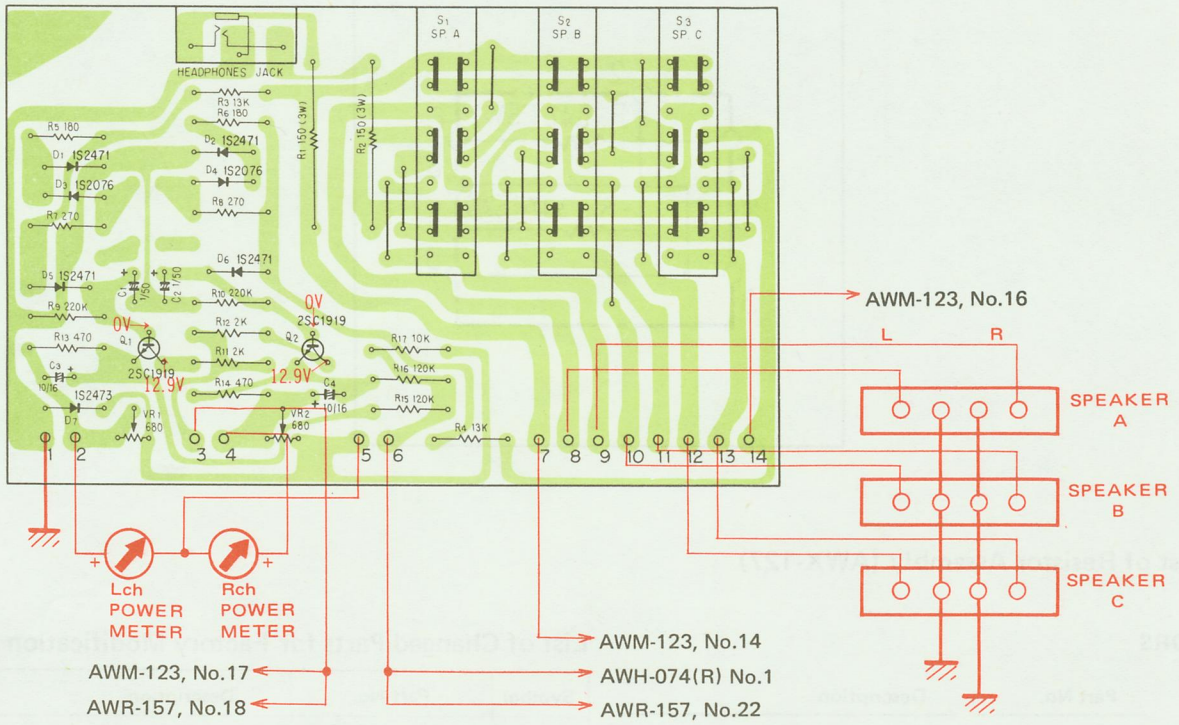

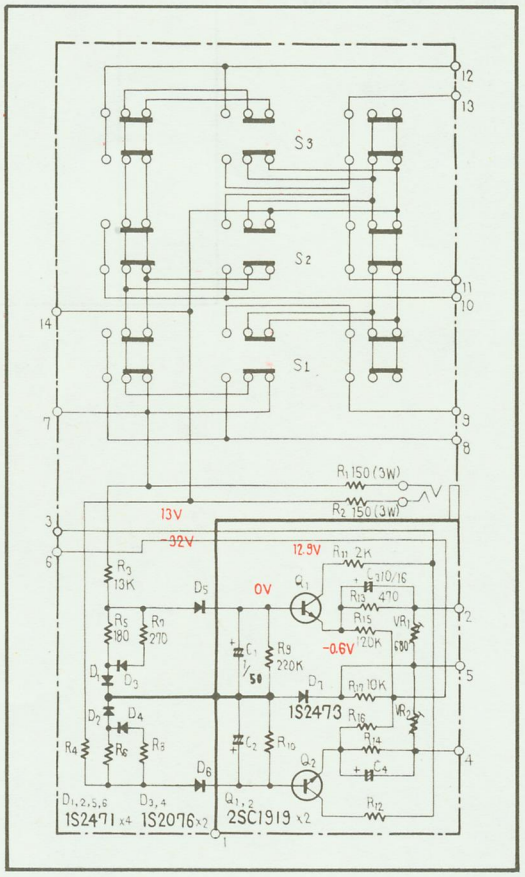

Parts List of Meter Amplifier Assembly (AWM-121)

CAPACITORS

Symbol	Part No.	Description		
C1	CEA 010P 50	Electrolytic	1	50V
C2	CEA 010P 50	Electrolytic	1	50V
C3	CEA 100P 16	Electrolytic	10	16V
C4	CEA 100P 16	Electrolytic	10	16V

RESISTORS

Symbol	Part No.	Description		
VR1	ACP-013	Semi fixed	(680)	
VR2	ACP-013	Semi fixed	(680)	
R1	RS3P 151J	Metal oxide	150	3W
R2	RS3P 151J	Metal oxide	150	3W
R3	RD¼PS 133J	Carbon film	13k	
R4	RD¼PS 133J	Carbon film	13k	
R5	RD¼PS 181J	Carbon film	180	
R6	RD¼PS 181J	Carbon film	180	
R7	RD¼PS 271J	Carbon film	270	
R8	RD¼PS 271J	Carbon film	270	
R9	RD¼PS 224J	Carbon film	220k	
R10	RD¼PS 224J	Carbon film	220k	
R11	RD¼PS 202J	Carbon film	2k	
R12	RD¼PS 202J	Carbon film	2k	
R13	RD¼PS 471J	Carbon film	470	
R14	RD¼PS 471J	Carbon film	470	
R15	RD¼PS 124J	Carbon film	120k	
R16	RD¼PS 124J	Carbon film	120k	

OTHERS

Symbol	Part No.	Description
	AKN-010	Phone jack (PHONES)
	ASG-132	Push switch (SPEAKERS)

SEMICONDUCTORS

Symbol	Part No.	Description
Q1	2SC1919-G or F (2SC1400-E or F)	Transistor
Q2	2SC1919-G or F (2SC1400-E or F)	Transistor
D1	1S2471	Diode
D2	1S2471	Diode
D3	1S2076	Diode
D4	1S2076	Diode
D5	1S2471	Diode
D6	1S2471	Diode
D7	1S2473	Diode

List of Changed Parts for Factory Modification

Symbol	Part No.	Description

13.13 POWER SUPPLY ASSEMBLY (AWR-157)

Foil side

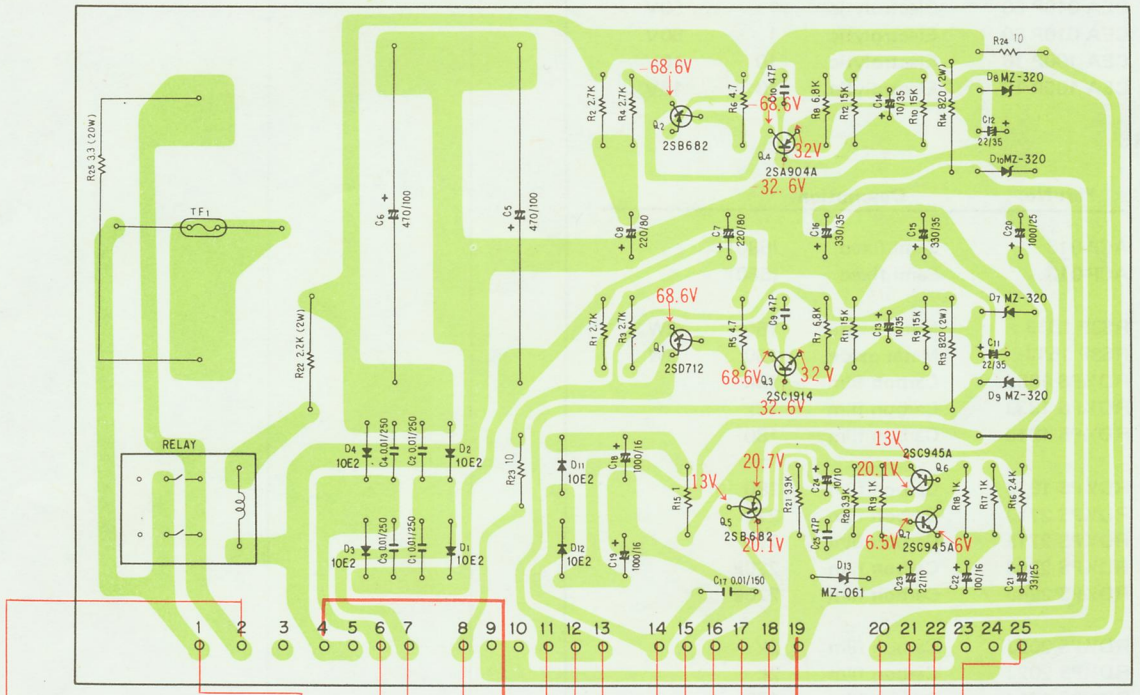

AWX-126, No.3
AWX-126, No.12
AWX-126, No.13
AWH-074, No.6 (R)
AWH-074, No.6 (L)

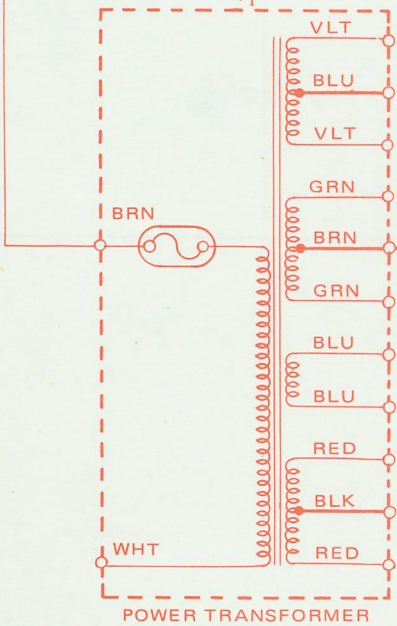

AWH-074, No.5 (L)
AWH-074, No.5 (R)
AWH-074, No.1 (R)
AWM-121, No.6
AWM-119, No.8
AWH-074, No.1 (L)
GWS-133, No.32
AWE-092, No.24
AWM-123, No.17
AWM-121, No.3
GWS-133, No.9, No.33
AWE-092, No.30
AWE-092, No.11
PL10
STEREO IND.
AWE-092, No.15
AWX-126, No.9
AWX-126, No.11
AWH-074, No.2 (R)
AWM-119, No.6
AWH-074, No.2 (L)

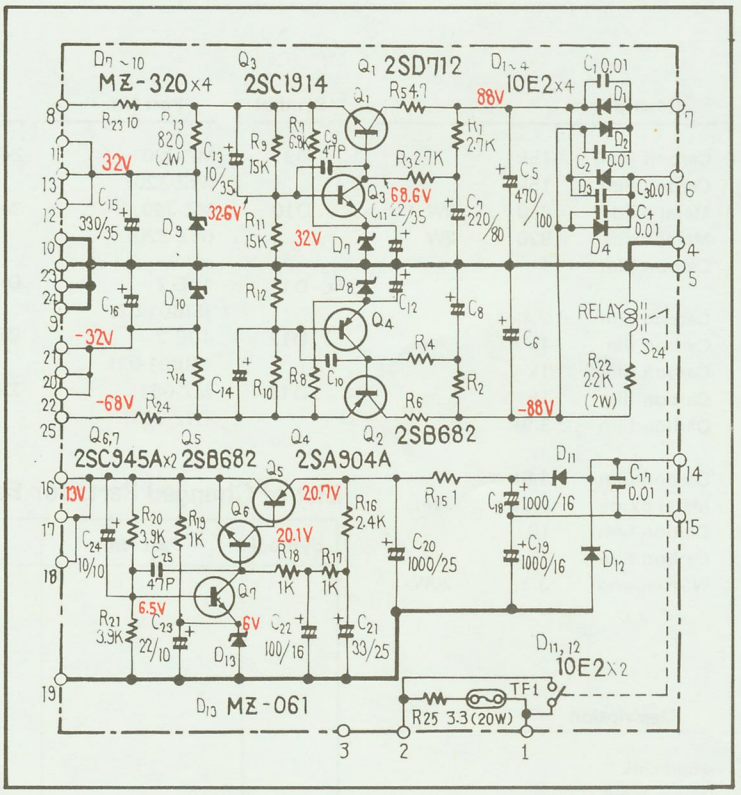

Parts List of Power Supply Assembly (AWR-157)

CAPACITORS

Symbol	Part No.	Description		
C1	ACG-001	Ceramic	0.01	250V
C2	ACG-001	Ceramic	0.01	250V
C3	ACG-001	Ceramic	0.01	250V
C4	ACG-001	Ceramic	0.01	250V
C5	CEB 471P 100	Electrolytic	470	100V
C6	CEB 471P 100	Electrolytic	470	100V
C7	CEA 221P 80	Electrolytic	220	80V
C8	CEA 221P 80	Electrolytic	220	80V
C9	CCDSL 470K 50	Ceramic	47p	50V
C10	CCDSL 470K 50	Ceramic	47p	50V
C11	CEA 220P 35	Electrolytic	22	35V
C12	CEA 220P 35	Electrolytic	22	35V
C13	CEA 100P 35	Electrolytic	10	35V
C14	CEA 100P 35	Electrolytic	10	35V
C15	CEA 331P 35	Electrolytic	330	35V
C16	CEA 331P 35	Electrolytic	330	35V
C17	ACG-004	Ceramic	0.01	150V
C18	CEA 102P 16	Electrolytic	1000	16V
C19	CEA 102P 16	Electrolytic	1000	16V
C20	CEA 102P 25	Electrolytic	1000	25V
C21	CEA 330P 25	Electrolytic	33	25V
C22	CEA 101P 16	Electrolytic	100	16V
C23	CEA 220P 10	Electrolytic	22	10V
C24	CEA 100P 10	Electrolytic	10	10V
C25	CCDSL 470K 50	Ceramic	47p	50V

RESISTORS

Symbol	Part No.	Description	
R1	RD¼PSF 272J	Carbon film	2.7k
R2	RD¼PSF 272J	Carbon film	2.7k
R3	RD¼PSF 272J	Carbon film	2.7k
R4	RD¼PSF 272J	Carbon film	2.7k
R5	RD¼PSF 4R7J	Carbon film	4.7
R6	RD¼PSF 4R7J	Carbon film	4.7
R7	RD¼PS 682J	Carbon film	6.8k
R8	RD¼PS 682J	Carbon film	6.8k
R9	RD¼PS 153J	Carbon film	15k
R10	RD¼PS 153J	Carbon film	15k

Symbol	Part No.	Description		
R11	RD¼PS 153J	Carbon film	15k	
R12	RD¼PS 153J	Carbon film	15k	
R13	RS2P 821J	Metal oxide	820	2W
R14	RS2P 821J	Metal oxide	820	2W
R15	RD¼PSF 010J	Carbon film	1	
R16	RD¼PS 242J	Carbon film	2.4k	
R17	RD¼PS 102J	Carbon film	1k	
R18	RD¼PS 102J	Carbon film	1k	
R19	RD¼PS 102J	Carbon film	1k	
R20	RD¼PS 392J	Carbon film	3.9k	
R21	RD¼PS 392J	Carbon film	3.9k	
R22	RS2P 222J	Metal oxide	2.2k	2W
R23	RD¼ PSF 100J	Carbon film	10	
R24	RD¼ PSF 100J	Carbon film	10	
R25	ACN-019	Wire wound	3.3	20W

OTHERS

Symbol	Part No.	Description
	ANH-203	Heat sink
TF1	AEX-001	Micro temp.
	ASR-046	Relay

SEMICONDUCTORS

Symbol	Part No.	Description
Q1	2SD712-D or C	Transistor
Q2	2SB682-D or C	Transistor
Q3	2SC1914A-G or F (2SC1890A-E or D)	Transistor
Q4	2SA904A-G or F (2SA893A-E or D)	Transistor
Q5	2SB682-D or C	Transistor
Q6	2SC945A-Q or R (2SC1914A-F)	Transistor
Q7	2SC945A-Q or R (2SC1914A-F)	Transistor
D1	10E2 (SIB01-02)	Diode
D2	10E2 (SIB01-02)	Diode
D3	10E2 (SIB01-02)	Diode
D4	10E2 (SIB01-02)	Diode
D7	MZ-320 (WZ-320)	Zener diode
D8	MZ-320 (WZ-320)	Zener diode
D9	MZ-320 (WZ-320)	Zener diode
D10	MZ-320 (WZ-320)	Zener diode
D11	10E 2 (SIB01-02)	Diode
D12	10E 2 (SIB01-02)	Diode
D13	MZ-061 (WZ-061)	Zener diode

List of Changed Parts for Factory Modification

Symbol	Part No.	Description

13.14 FUSE ASSEMBLY (AWX-126) or (AWX-139)

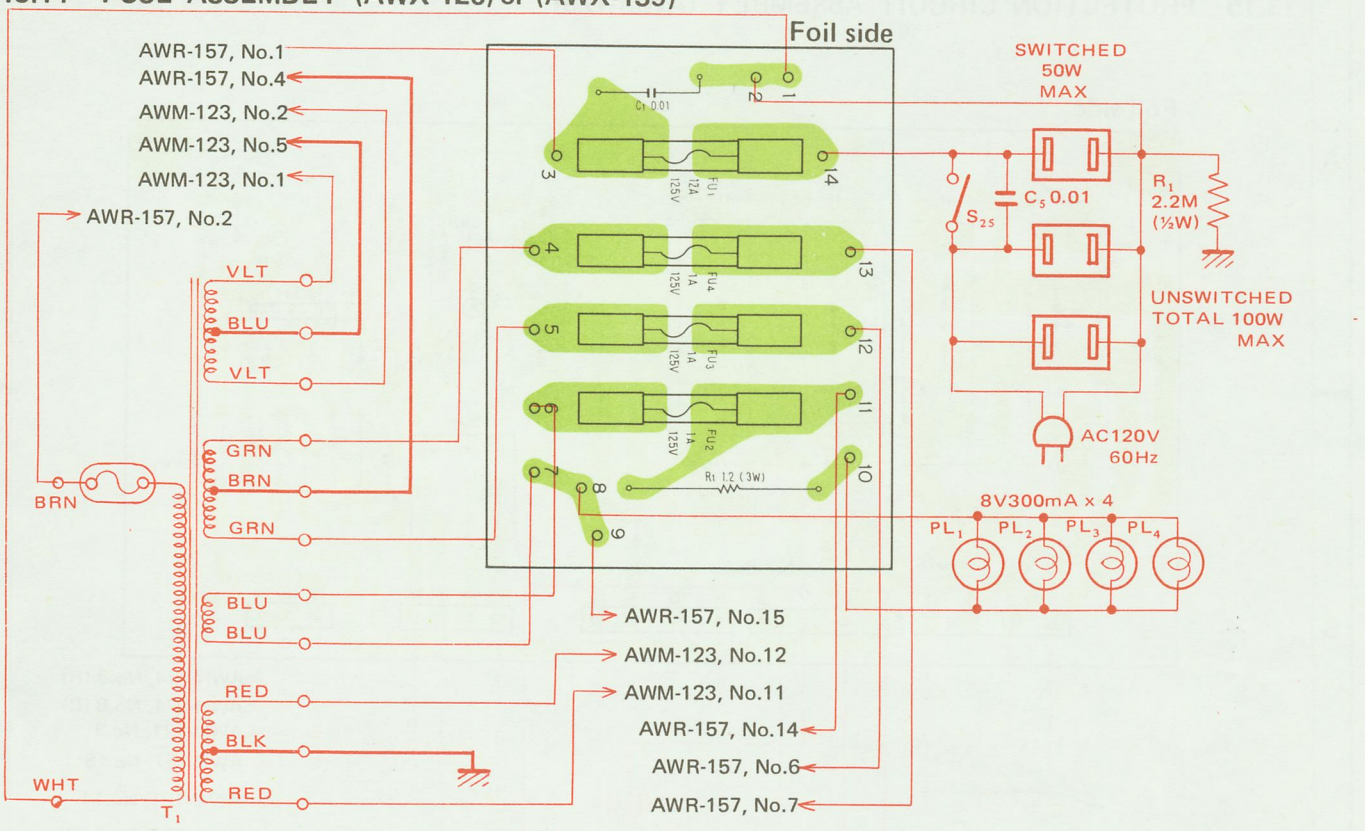

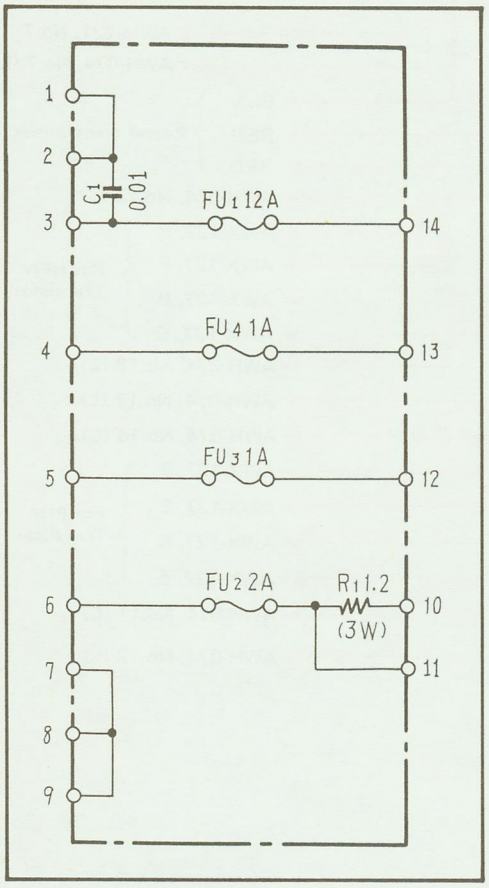

NOTE:
AWS-126 is applicable to the KU type, and AWX-139 is for the KC type.

Parts List

RESISTOR

Symbol	Part No.	Description		
R1	RT3B 1R2K	Wire wound	1.2	3W

CAPACITOR

Symbol	Part No.	Description		
C1	ACG-003	Ceramic (For KU type)	0.01	125V
	ACG-014	Ceramic (For KC type)	0.01	125V

OTHERS

Symbol	Part No.	Description
	AKR-013	Fuse clip
	AKR-030	Fuse clip
	AEC-279	Cover (For KU type)
	AEC-365	Cover (For KC type)

13.15 PROTECTION CIRCUIT ASSEMBLY (AWM-123)

Foil side

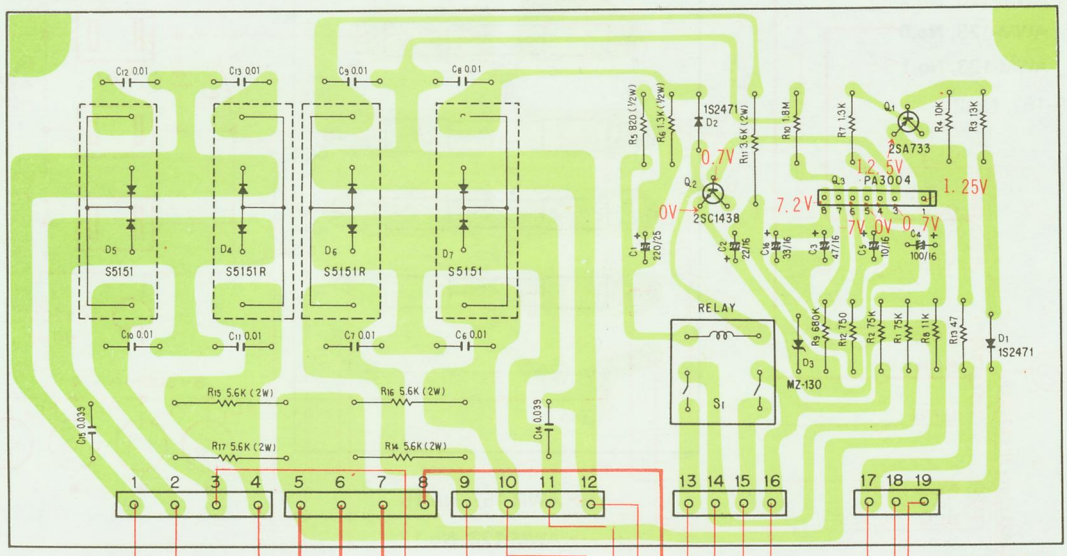

AWH-074, No.8 (R)
AWH-074, No.8 (L)
AWM-121, No.3
AWR-157, No.18
AWM-121, No.14
AWH-074, No.7 (R)
AWM-121, No.7
AWH-074, No.7 (L)

15000/100 x 2

15000/100 x 2

Power Transformer { VLT, BLU, VLT }

{ BLK, RED, RED } Power transformer

AWH-074, No.16 (R)

For NPN Transistor { AWX-127, B / AWX-127, E / AWX-127, B / AWX-127, E }

AWH-074, No.18 (R)
AWH-074, No.17 (R)
AWH-074, No.10 (R)

For PNP Transistor { AWX-127, B / AWX-127, E / AWX-127, B / AWX-127, E }

AWH-074, No.11 (R)
AWH-074, No.12 (R)

AWH-074, No.16 (L)

For NPN Transistor { AWX-127, B / AWX-127, E / AWX-127, B / AWX-127, E }

AWH-074, No.18 (L)
AWH-074, No.17 (L)
AWH-074, No.10 (L)

For PNP Transistor { AWX-127, B / AWX-127, E / AWX-127, B / AWX-127, E }

AWH-074, No.11 (L)
AWH-074, No.12 (L)

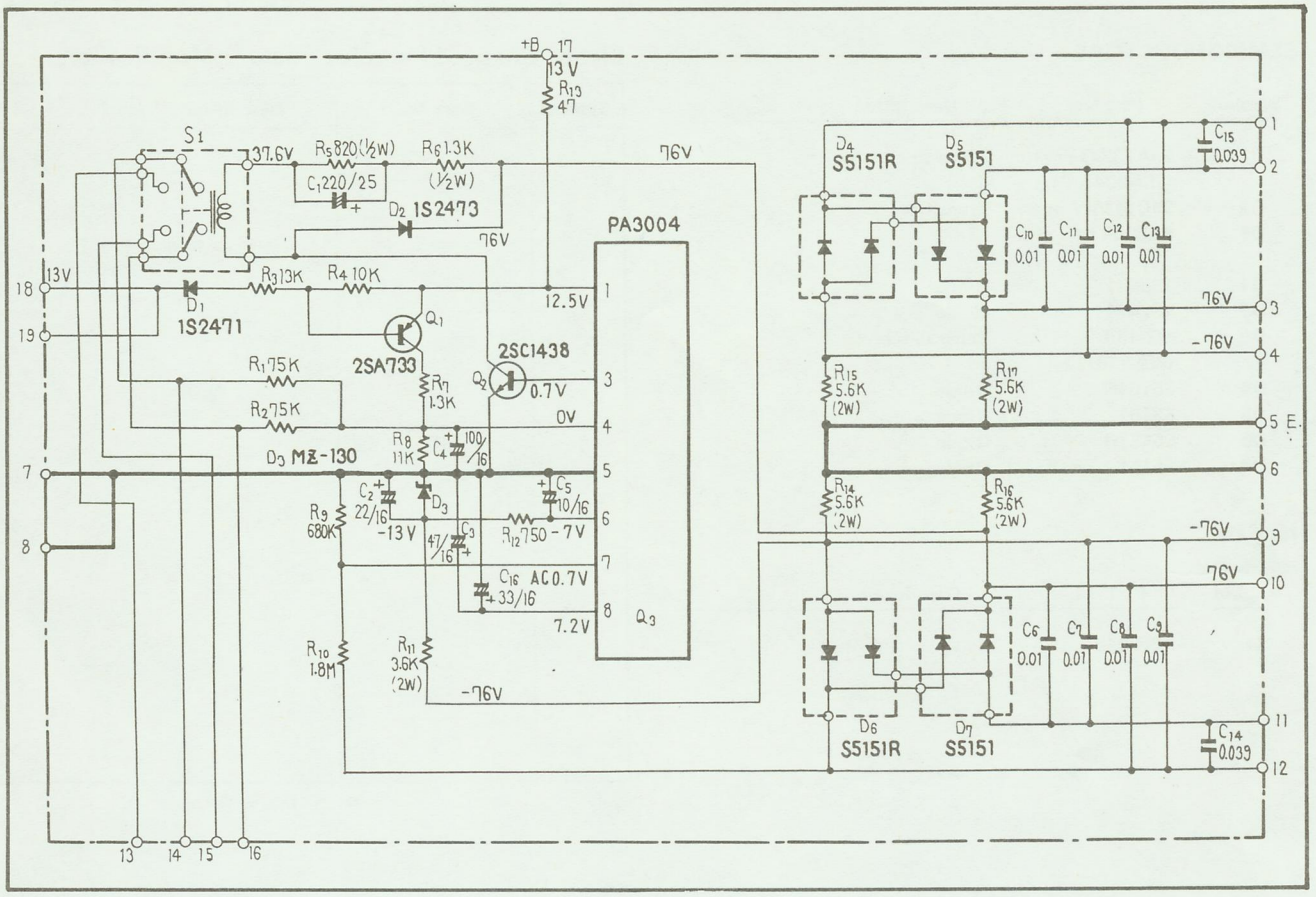

Parts List of Protection Assembly (AWM-123)

CAPACITORS

Symbol	Part No.	Description		
C1	CEA 221P 25	Electrolytic	220	25V
C2	CEA 220P 16	Electrolytic	22	16V
C3	CEA 470P 16	Electrolytic	47	16V
C4	CEA 101P 16	Electrolytic	100	16V
C5	CEA 100P 16	Electrolytic	10	16V
C6	ACG-001	Ceramic	0.01	250V
C7	ACG-001	Ceramic	0.01	250V
C8	ACG-001	Ceramic	0.01	250V
C9	ACG-001	Ceramic	0.01	250V
C10	ACG-001	Ceramic	0.01	250V
C11	ACG-001	Ceramic	0.01	250V
C12	ACG-001	Ceramic	0.01	250V
C13	ACG-001	Ceramic	0.01	250V
C14	CQMA 393J 250	Mylar	0.039	250V
C15	CQMA 393J 250	Mylar	0.039	250V
C16	CEA 330P 16	Electrolytic	33	16V

RESISTORS

Symbol	Part No.	Description		
R1	RD¼PS 753J	Carbon film	75k	
R2	RD¼PS 753J	Carbon film	75k	
R3	RD¼PS 133J	Carbon film	13k	
R4	RD¼PS 103J	Carbon film	10k	
R5	RD½PS 821J	Carbon film	820	½W
R6	RD½PS 132J	Carbon film	1.3k	½W
R7	RD¼PS 132J	Carbon film	1.3k	
R8	RD¼PS 113J	Carbon film	11k	
R9	RD¼PS 684J	Carbon film	680k	
R10	RD¼PS 185J	Carbon film	1.8M	
R11	RS2P 362J	Metal oxide	3.6k	2W
R12	RD¼PS 751J	Carbon film	750	
R13	RD¼PS 470J	Carbon film	47	
R14	RS2P 562J	Metal oxide	5.6k	2W
R15	RS2P 562J	Metal oxide	5.6k	2W
R16	RS2P 562J	Metal oxide	5.6k	2W
R17	RS2P 562J	Metal oxide	5.6k	2W

SEMICONDUCTORS

Symbol	Part No.	Description
Q1	2SA733-Q or R (2SA904A-F)	Transistor
Q2	2SC1438-V or B	Transistor
Q3	PA3004	IC
D1	1S2471	Diode
D2	1S2471	Diode
D3	MZ-130 (WZ-130)	Zener diode
D4	S5151R	Diode
D5	S5151	Diode
D6	S5151R	Diode
D7	S5151	Diode

RELAY

Symbol	Part No.	Description
S1	ASR-048	Relay

List of Changed Parts for Factory Modification

Symbol	Part No.	Description

ADDITIONAL

Service Manual

PIONEER

AM/FM STEREO RECEIVER

SX-1280 S S/G

- This additional service manual provides the description of the parts applied only S, and S/G types.
- For detailed instructions on adjustments, circuit descriptions, exploded views, etc., please refer to this Service Manual (page 3 ~ page 80).

1. SPECIFICATIONS

Preamplifier Section

Input (Sensitivity/Impedance)
TAPE PLAY 2 (DIN connector). . . . 150mV/50kilohms
Output Level/Impedance
TAPE 2 (DIN connector) 30mV/80kilohms

Miscellaneous

Power requirements . . . . . 110V, 120V, 220V, 240V switchable, 50/60Hz
Power Consumption . . . . . .1100W (max.)

Furnished Parts

Fuse 6A 1
Fuse 12A. 1

2. CONTRAST OF MISCELLANEOUS PARTS

NOTE:
- *Capacitors: in μF unless otherwise noted p:pF*
- *Resistors: in Ω, ¼W unless otherwise noted k:kΩ, M:MΩ*

P.C. BOARD ASSEMBLIES

Symbol & Description	Part No.			
	KU	S	S/G	Remarks
Fuse assembly	AWX-126	AWX-134	AWX-134	
5P connector assembly	. . . . .	AWX-062	AWX-062	

TRANSFORMER

Symbol & Description	Part No.			
	KU	S	S/G	Remarks
T1 Power transformer	ATT-447	ATT-474	ATT-475	

SWITCHES

Symbol & Description		Part No.			
		KU	S	S/G	Remarks
S26	Plug in selector (line voltage selector)	. . . . .	AKR-031	AKR-031	
S27	Slide switch (DE-EMPHASIS)	. . . . .	ASH-016	ASH-016	

CAPACITORS

Symbol & Description				Part No. KU	S	S/G	Remarks
C5	Ceramic	0.01	125V	ACG-003	.....	.....	
C5	Ceramic	0.01	250V	.....	ACG-001	ACG-001	
C14	Ceramic	0.01	250V	.....	ACG-001	ACG-001	

RESISTOR

Symbol & Description				Part No. KU	S	S/G	Remarks
R1	Carbon film	2.2M	½W	RD½PS 225J	.....	.....	

FUSES

Symbol & Description			Parts No. KU	S	S/G	Remarks
FU1	Fuse	12A	AEK-301	.....	AEK-301	
FU1	Fuse	6A	.....	AEK-109	.....	

OTHERS

Symbol & Description		Part No. KU	S	S/G	Remarks
	AC power cord	ADG-013	ADG-013	ADG-015	
	Condenser cover	AEC-297	AEC-099	AEC-099	
	Operating instructions	ARB-244	ARB-247	ARB-247	
	Vinyl pouch	.....	E11-033	E11-033	
	Spare fuse 12A	.....	AEK-301	AEK-301	
	Spare fuse 6A	.....	AEK-109	AEK-109	
	AC socket	AKP-005	AKP-020	AKP-020	

3. EXPLODED VIEW

NOTE:
Parts indicated in green type cannot be supplied.

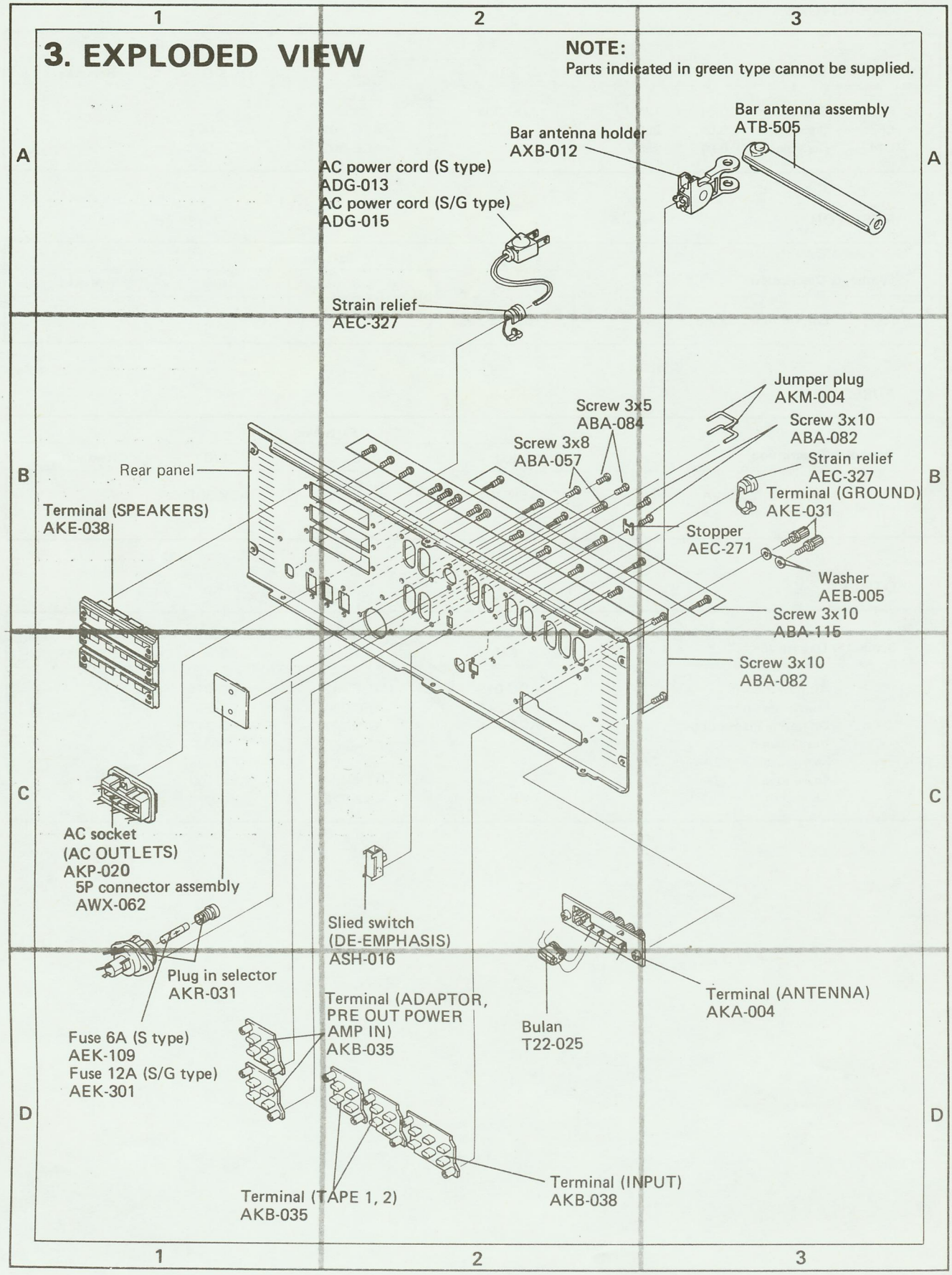

4. SCHEMATIC DIAGRAMS, P.C. BOARD PATTERNS AND

4.1 SCHEMATIC DIAGRAM

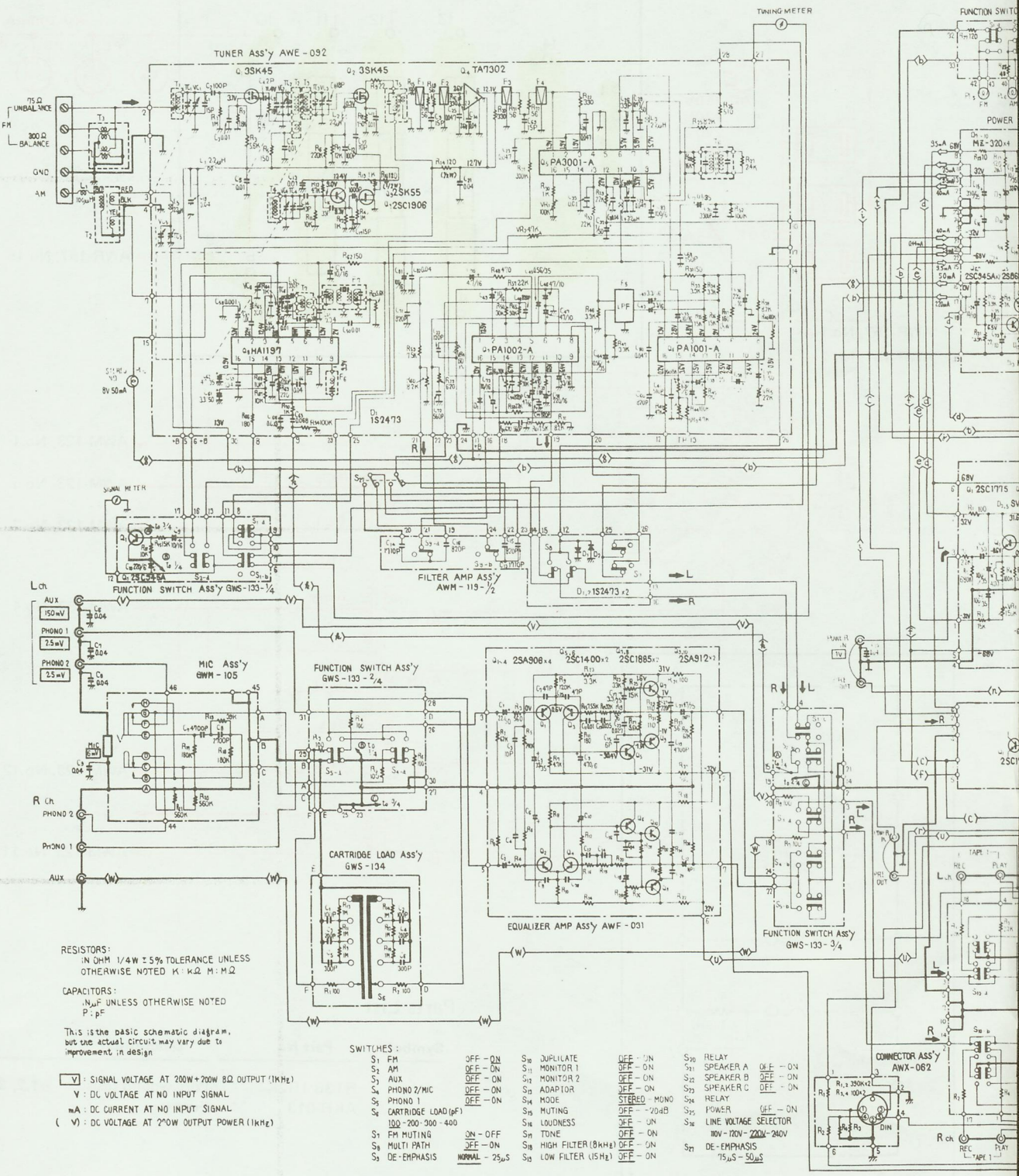

ERNS AND PARTS LIST

NOTE:
The indicated semiconductors are representative ones only. Other alternative semiconductors may be used and are listed in the parts list.

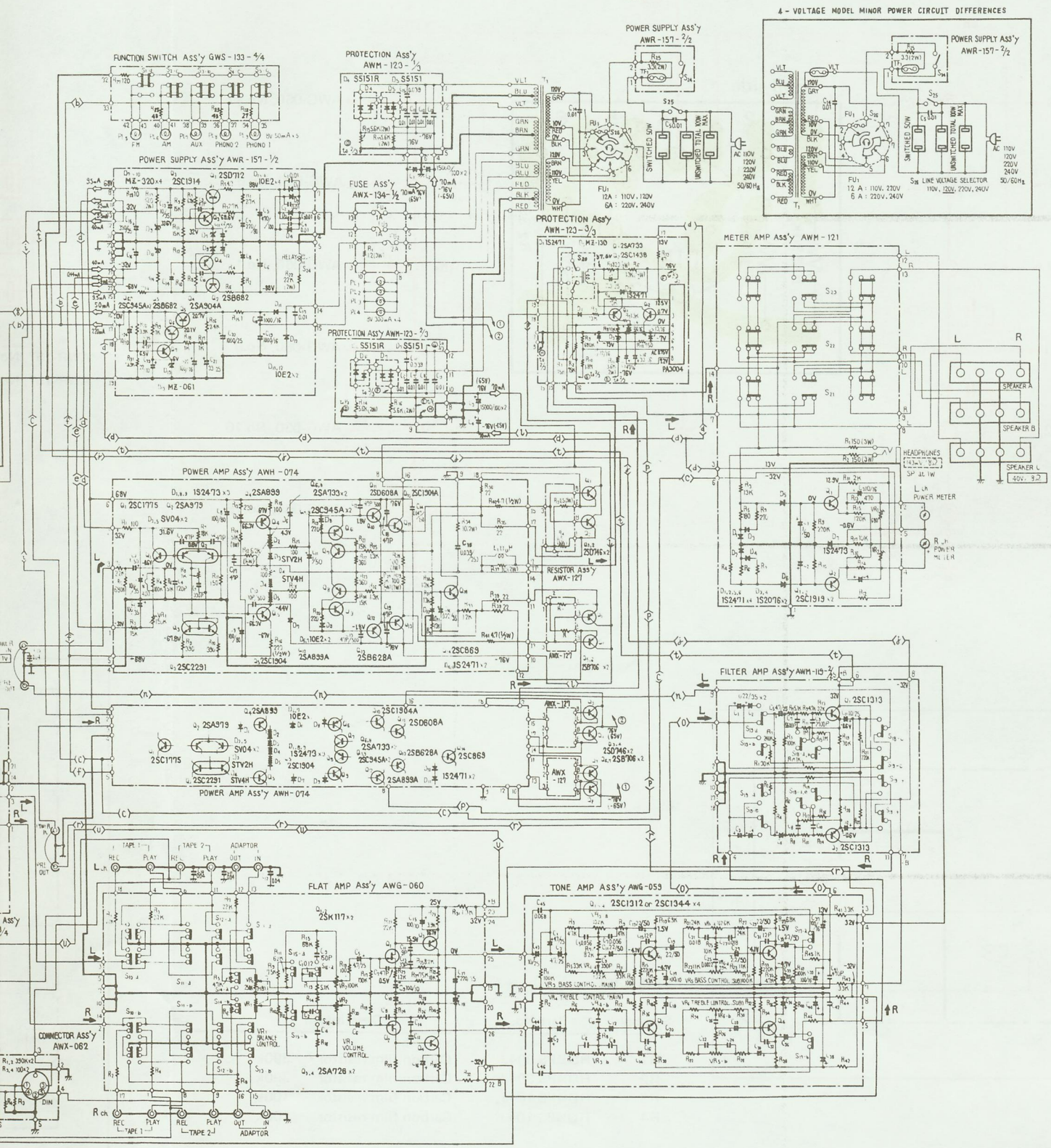

4.2 5P CONNECTOR ASSEMBLY (AWX-062)

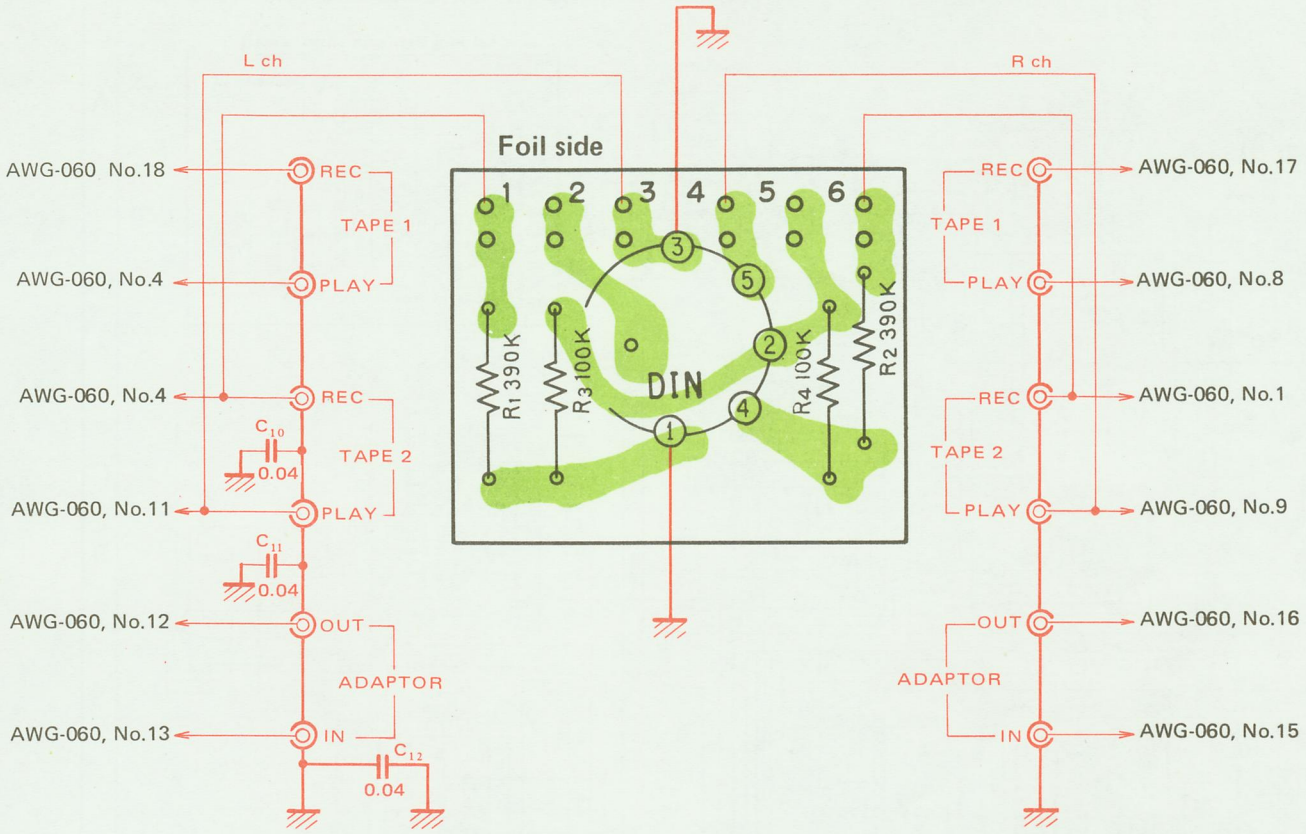

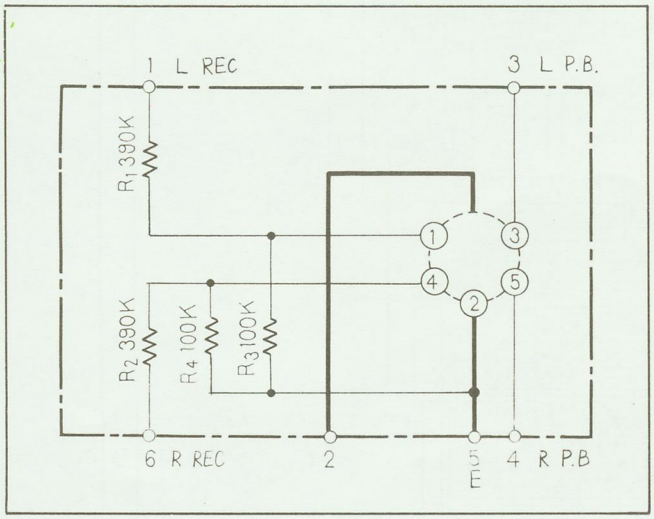

Parts List

Symbol	Part No.	Description	
R1	RD¼PS 394J	Carbon film resistor	390k
R2	RD¼PS 394J	Carbon film resistor	390k
R3	RD¼PS 104J	Carbon film resistor	100k
R4	RD¼PS 104J	Carbon film resistor	100k
	AKP-007	Connector socket 5p (REC/PLAY)	

4.3 FUSE ASSEMBLY (AWX-134)

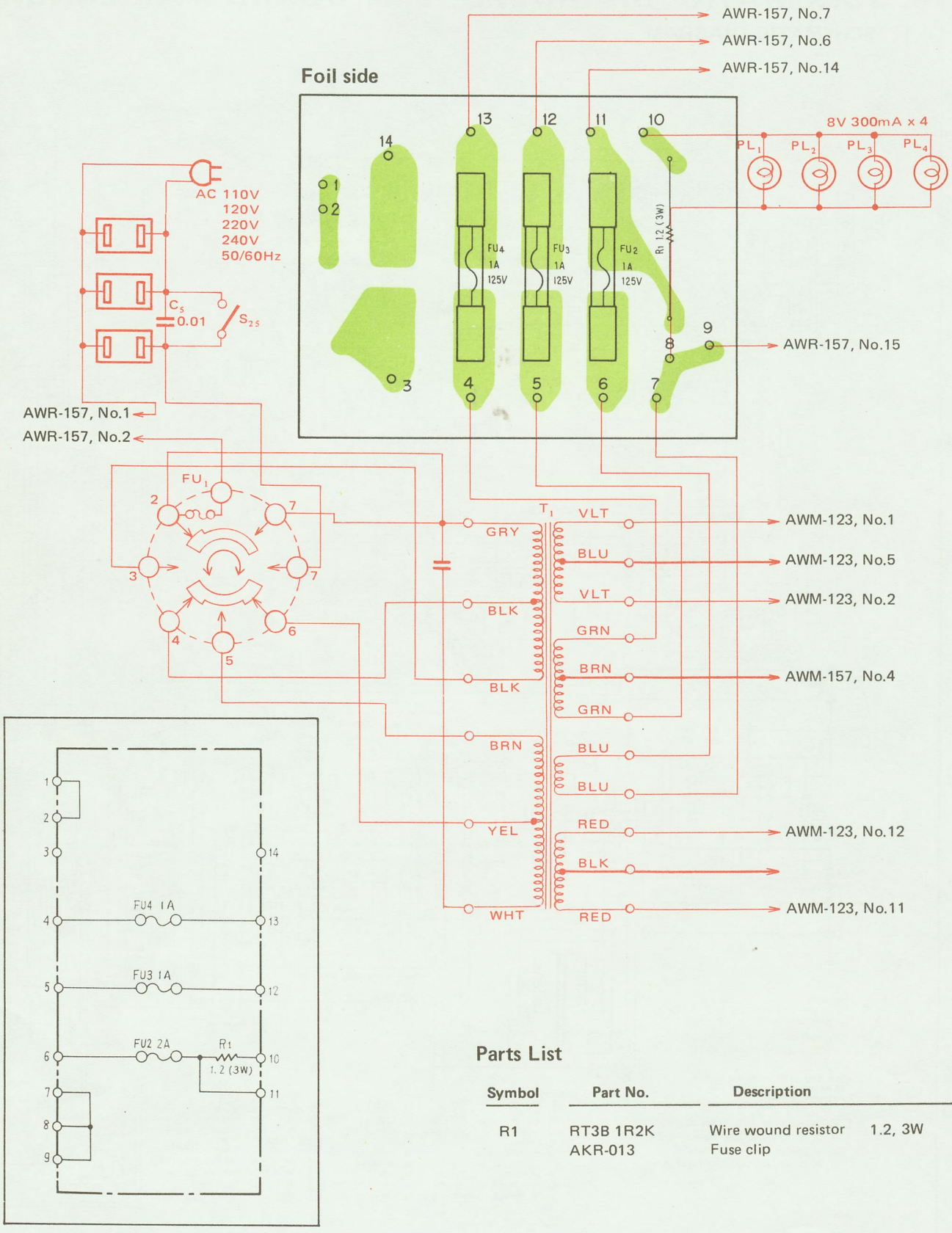

Parts List

Symbol	Part No.	Description	
R1	RT3B 1R2K	Wire wound resistor	1.2, 3W
	AKR-013	Fuse clip	

PIONEER ELECTRONIC CORPORATION
4-1 Meguro 1-Chome Meguro-ku Tokyo 153 Japan
U.S. PIONEER ELECTRONICS CORPORATION
85 Oxford Drive Moonachie New Jersey 07074 U.S.A.
PIONEER ELECTRONIC (EUROPE) N.V.
Luithagen-Haven 9 2030 Antwerp Belgium
PIONEER ELECTRONICS AUSTRALIA PTY. LTD.
178-184 Boundary Road Braeside Victoria 3195, Australia
1977